shindaiwa®

Lista de Piezas
Illustrated Parts List

B45-1 Desmalezadora
B45-1 Brushcutter



NÚMEROS DE SERIE / SERIAL NUMBERS

MOTOR / ENGINE:

U53626001001 - U53626999999

EJE DE TRANSMISIÓN / DRIVESHAFT:

U26620001001 - U26620999999

Los accesorios para los productos Shindaiwa se pueden encontrar en:
Accessories for Shindaiwa products can be found at:
www.shindaiwa-latinamerica.com/Products/Accessories

MOTOR 2
ENGINE

MOTOR 3
ENGINE

CARBURADOR 4
CARBURETOR

CARBURADOR 5
CARBURETOR

CUBIERTA DE MOTOR 6
ENGINE COVER

ADMISIÓN 7
INTAKE

ESCAPE 8
EXHAUST

ENCENDIDO 9
IGNITION

ARRANCADOR 10
STARTER

SISTEMA DE COMBUSTIBLE 11
FUEL SYSTEM

CARCASA DE VENTILADOR N/S: U26620001001 - U26620003685 12
FAN CASE S/N: U26620001001 - U26620003685

CARCASA DE VENTILADOR N/S: U26620003686 - U26620999999 13
FAN CASE S/N: U26620003686 - U26620999999

TUBO PRINCIPAL 14
MAIN PIPE

MANGO EN U 15
U-HANDLE

MANGO DE CONTROL 16
CONTROL HANDLE

CAJA DE ENGRANAJES 17
GEAR CASE

PROTECTOR CONTRA RESIDUOS 18
DEBRIS SHIELD

ARNÉS 19
HARNESS

HERRAMIENTAS 19
TOOLS

TUBO AL POR MAYOR 20
BULK PIPE

CUERDA DEL ARRANCADOR AL POR MAYOR 20
BULK STARTER ROPE

Actualizado Agosto 2024

400 Oakwood Road, Lake Zurich IL 60047 Telephone: 847-540-8400 Fax: 847-540-8416 **www.shindaiwa.**

MOTOR
ENGINE
MOTOR

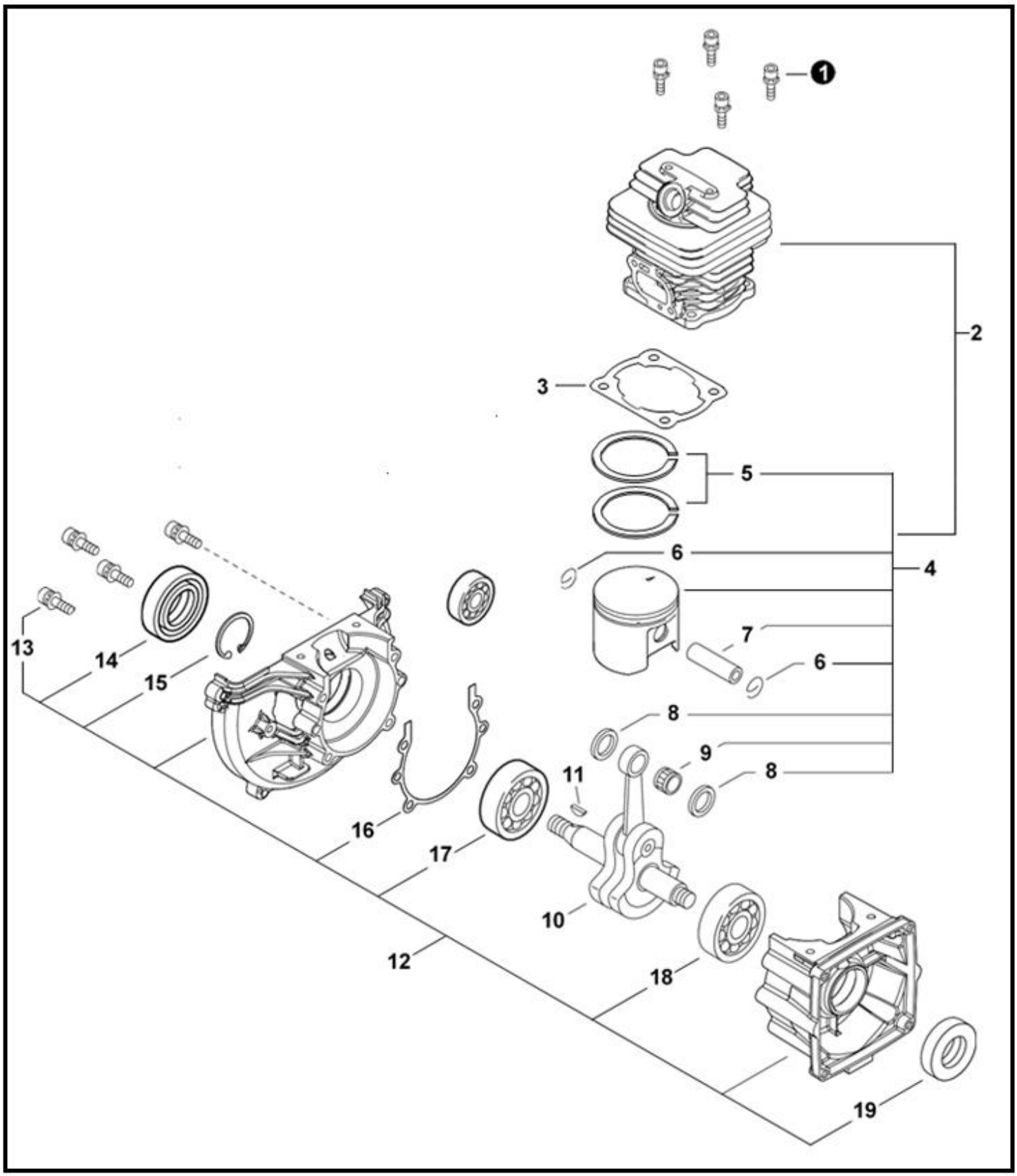

MOTOR

NO.	ECHO P/N	SHINDAIWA P/N	UBI	QTY.	DESCRIPCIÓN	DESCRIPTION
1	90016205020	E500000462	Z-6	4	TORNILLO TAPA B460/SRM4605	BOLT 5x20
2	**P021038921**	**E500000895**	**[K]**	**1**	**KIT REPARACION SRM4605/B460/B451**	**CYLINDER**
3	10101042231	E500000045	Z-5	1	EMPAQUE CILINDRO B460/SRM4605	GASKET, CYLINDER
4	**P100007980**	**S500000113**	**Z-7**	**1**	**KIT PISTON B451**	**PISTON KIT**
5	A101000760	S500000112	Z-60	2	ANILLOS B451 PISTON X 2	RING, PISTON
6	V580000010	E500001444	Z-46	2	ANILLO RETEN 8 DM6110/SRM4300/4605	RING, SNAP 10
7	10001300410	E500000048	Z-34	1	PASADOR PISTON B460/SRM4605	PIN, PISTON
8	V307000050	E500000049	Z-34	2	ARANDELA DE PRESION B460/SRM4605	WASHER, THRUST 10
9	10001212331	E500000006	Z-34	1	COJINETE VIELA B430/6110/SRM4300	BEARING, NEEDLE 10
10	A011001590	S500000388		1	CIGUENAL B45-1/SRM4610	CRANKSHAFT ASSY
11	10014212330	E500000641	Z-40	1	CHAVETA CIGUENAL SRM4605/B460	KEY, WOODRUFF
12	**P100007970**	**S500000389**		**1**	**CARTER COMPLETO RAMIENTOS B41/SRM4610**	**CRANKCASE SET**
13	90016205030	E500001723	Z-47	4	PERNO 5X30 CS420/SRM4605/B460	BOLT 5x30
14	V508000120	S500000115	Z-60	1	SELLO DE ACEITE B451	SEAL, OIL 15
15	90070200035	0243235150	Z-1	1	ANILLO RETENCION CAJA ENG.C-35.B45.	RING, SNAP 35
16	V102000330	S500000114	0	1	EMPAQUE CARTER B451	GASKET, CRANKCASE
17	90081006202	0200006202	Z-1	1	COJINETE 6202 B45 B450 B530 C35 C350	BEARING, BALL
18	9403536201	E500000090	Z-5	1	COJINETE TAPA 420/3605/HC152	BEARING, BALL 6201
19	10021227930	E500000050	Z-5	1	RETENEDOR CARTER B460/SRM4605/B451	SEAL, OIL 12

CARBURADOR

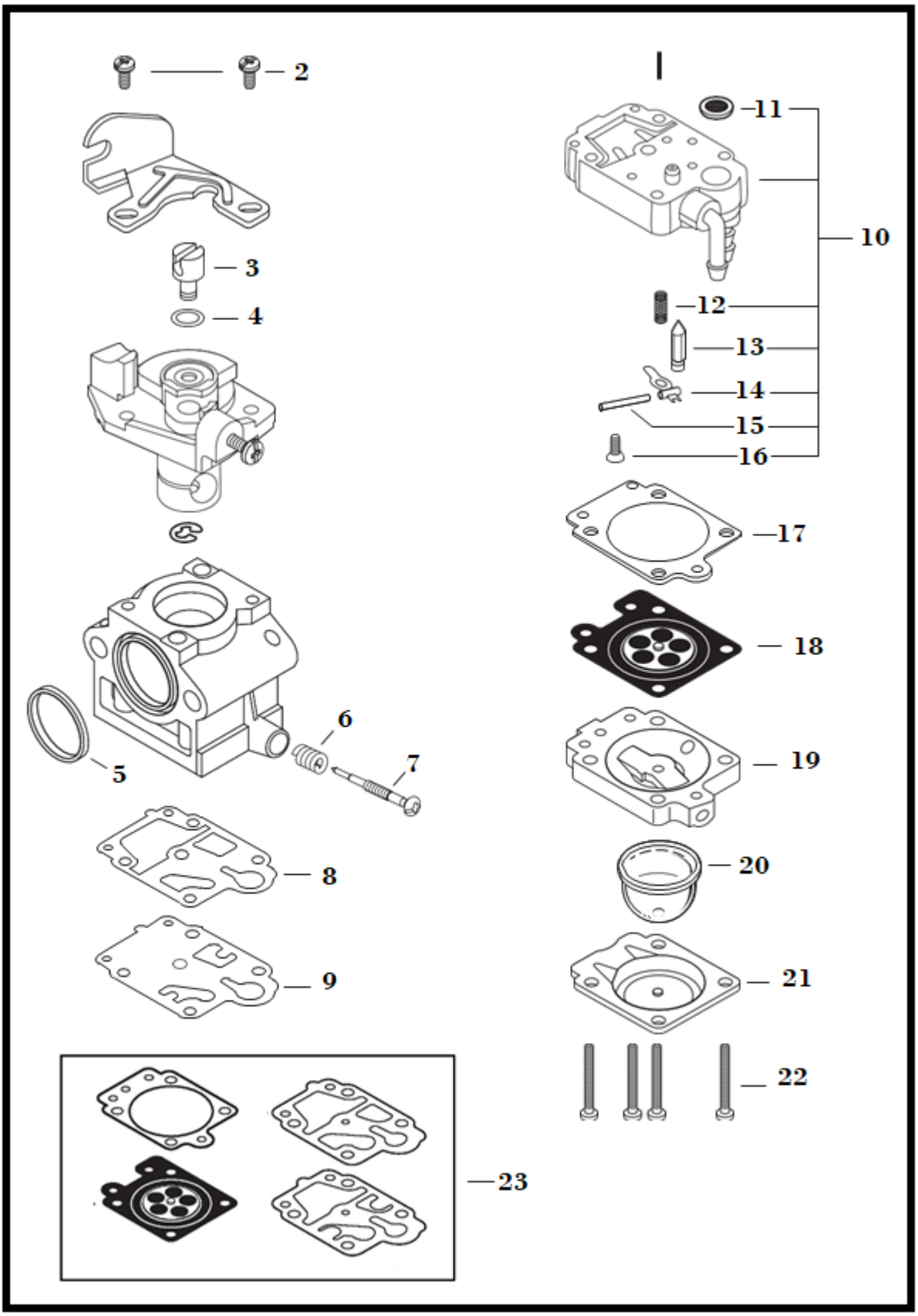

CARBURADOR

NO.	ECHO P/N	SHINDAIWA P/N	UBI	QTY.	DESCRIPCIÓN	DESCRIPTION
1	**A021004980**	**S500000149**	**Z-7**	**1**	**CARBURADOR SOLO B451 Z-7**	**CARBURETOR HR02-2B01-0000**
2	P006000380	S500000390		2	TORNILLO BASE CARBURADOR B45-1	SCREW
3	P006000470	S500000391		1	TORNILLO AJUSTE CARBURADOR B45-1	SWIVEL
4	P006000510	S500000396		1	O RING TORNILLO AJUSTE CARBURADOR B45-1	WASHER
5	P006000360	S500000397		1	EMPAQUE CARBURADOR B45-1	RING, PACKING
6	P006000350	S500000398		1	RESORTE TORNILLO AJUSTE B45-1	SPRING
7	P006000340	S500000399		1	TORNILLO AJUSTE B45-1	NEEDLE - MIXTURE
8	12312540630	E500000442	Z-36	1	EMPAQUE BOMBA CARBURADOR DM6110 Z-36	GASKET, PUMP
9	P006000320	S500000400		1	DIAFRAGMA BOMBA B45-1	DIAPHRAGM, PUMP
10	**P006000390**	**S500000116**	**Z-60**	**1**	**MONTAJE BOMBA B451 Z-60**	**BODY ASSY, PUMP**
11	12312610631	7003081380	Z-4	1	FILTRO CARBURADOR C230/T230X Z-4	SCREEN, FUEL INLET
12	P006000400	S500000117	Z-60	1	RESORTE PALANCA CARBURADOR Z-60	SPRING, METERING LEVER
13	P006000450	S500000118	Z-60	1	VALVULA REGULADORA B451 Z-60	VALVE, INLET NEEDLE
14	P006000430	S500000119	Z-60	1	PALANCA DE MEDICION B451 Z-60	LEVER, METERING
15	P006000440	S500000120	Z-60	1	PASADOR PALANCA CARBURADOR Z-60	PIN, METERING LEVER
16	P006000410	S500000121	Z-60	1	TORNILLO PALANCA B451 Z-60	SCREW
17	12314005560	E500000260	Z-6	1	EMPAQUE DIAFRAGMA DM6110/C230/T230 Z-6	GASKET, METERING DIAPHRAGM
18	P003001850	E500000135	Z-34	1	DIAFRAGMA SOLO CS420ES Z-34	DIAPHRAGM, METERING
19	12318005560	2001681420	Z-11	1	TAPA BOMBA CARBURADOR C230 Z-11	BODY ASSY, PURGE
20	12318140630	E500000262	C1	1	BOMBA CEBADO DM6110/3605/C230/T18 Z-6	BULB, PURGE
21	12314205560	2001681510	Z-11	1	TAPA BOMBA CEBADO C230 Z-11	RETAINER, PURGE BULB
22	P006000370	S500000122	Z-60	4	TORNILLO TAPA BOMBA B451 Z-60	SCREW
23	**99909-159**	**99909-159**	**Z-5**	**1**	**KIT DIAFRAGMA C230/T230XR Z-5**	**RETAINER, PURGE BULB**

CUBIERTA DE MOTOR
ENGINE COVER

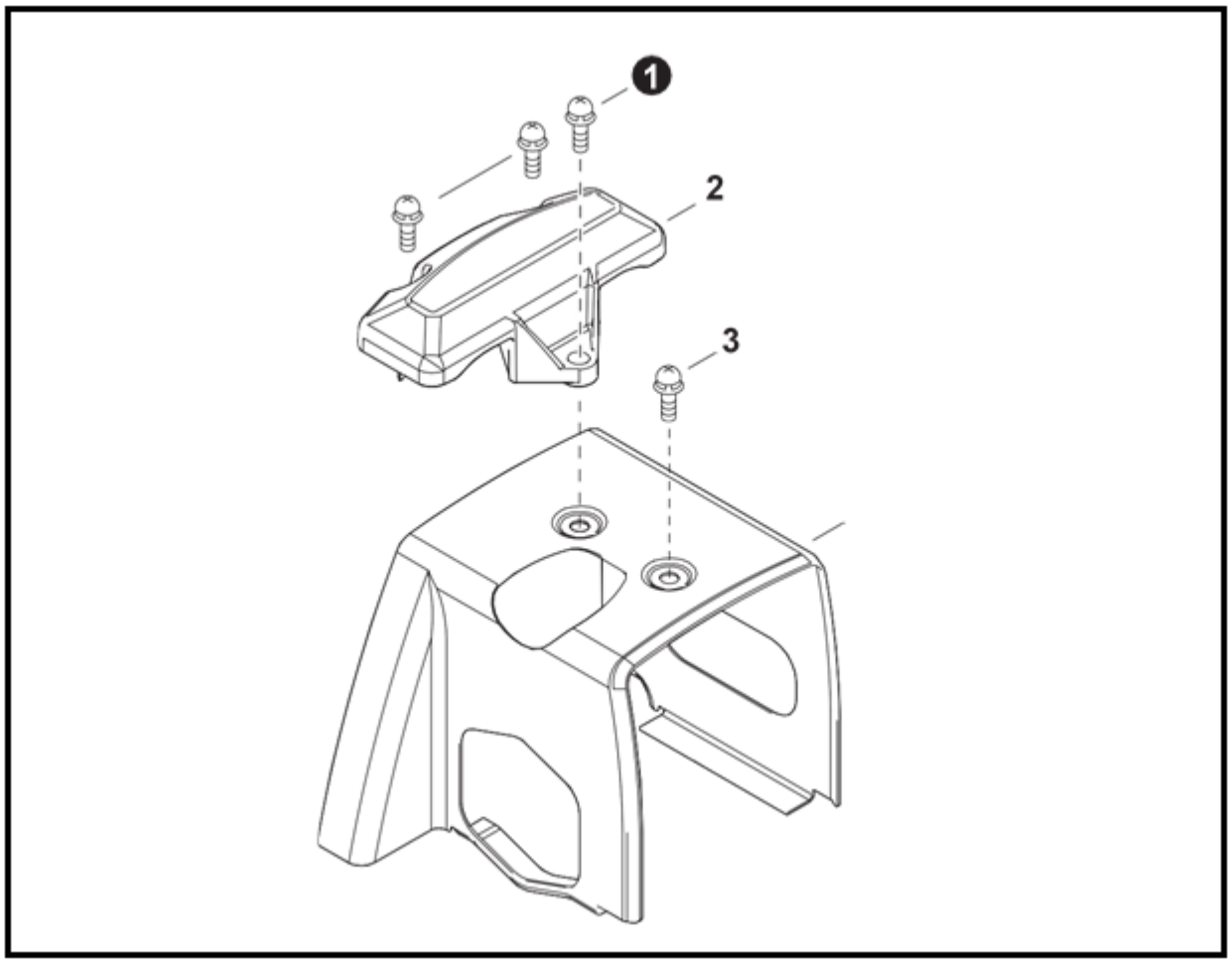

NO.	ECHO P/N	SHINDAIWA P/N	UBI	QTY.	DESCRIPCIÓN	DESCRIPTION
1	90023805014	E500000579	Z-38	3	PERNO ARRANCADOR SRM4605/B460 Z-38	SCREW 5x14
2	A162000260	S500000401		1	PROTECTOR BUJIA B45-1	SWIVEL
3	90023805010	E500001034	Z-43	1	PERNO SMB 5X10 SRM4605/B460 Z-43	SCREW 5x10
4	A160003450	A160003450	Z-63	1	TAPA CILINDRO B460/B45-1	COVER, ENGINE

ADMISIÓN
INTAKE

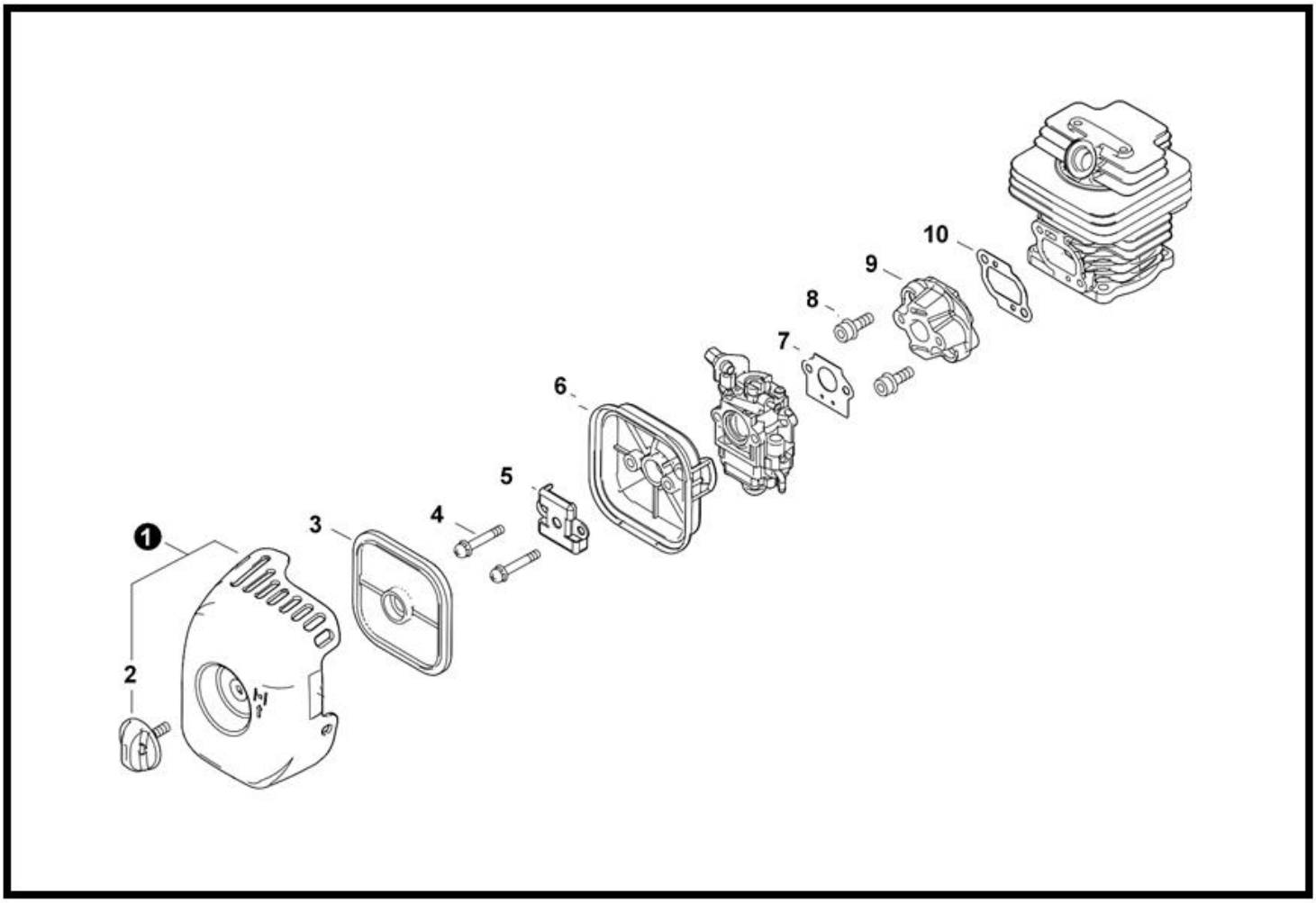

NO.	ECHO P/N	SHINDAIWA P/N	UBI	QTY.	DESCRIPCIÓN	DESCRIPTION
1	P100008010	S500000375	Z-63	3	TAPA FILTRO DE AIRE B451 Z-63	COVER ASSY, AIR FILTER
2	V299000520	S500000402		1	TORNILLO TAPA FILTRO B45-1	THUMBSCREW
3	A226002280	A160003450	Z-63	1	TAPA CILINDRO B460/B45-1	FILTER, AIR
4	90024205064	S500000403		1	TORNILLO CARBURADOR B45-1	SCREW 5x64
5	A244000380	S500000404		1	PLACA BASE FILTRO B45-1	PLATE, PREVENT
6	P021053190	S500000405		1	BASE FILTRO DE AIRE B45-1	CASE ASSY, AIR FILTER
7	V103002090	S500000124	Z-60	1	EMPAQUE ADMISION B451 Z-60	GASKET, INTAKE
8	90016205025	E500000133	Z-34	1	PERNO INSULADOR B451/4605/B460 Z-34	BOLT 5x25
9	A200001230	S500000125	Z-60	1	INSULADOR B451 Z-60	INSULATOR, INTAKE
10	13001642231	E500000307	B4	1	EMPAQUE INSULADOR SRM4605/B460 Z-6	GASKET, INTAKE

ESCAPE
EXHAUST

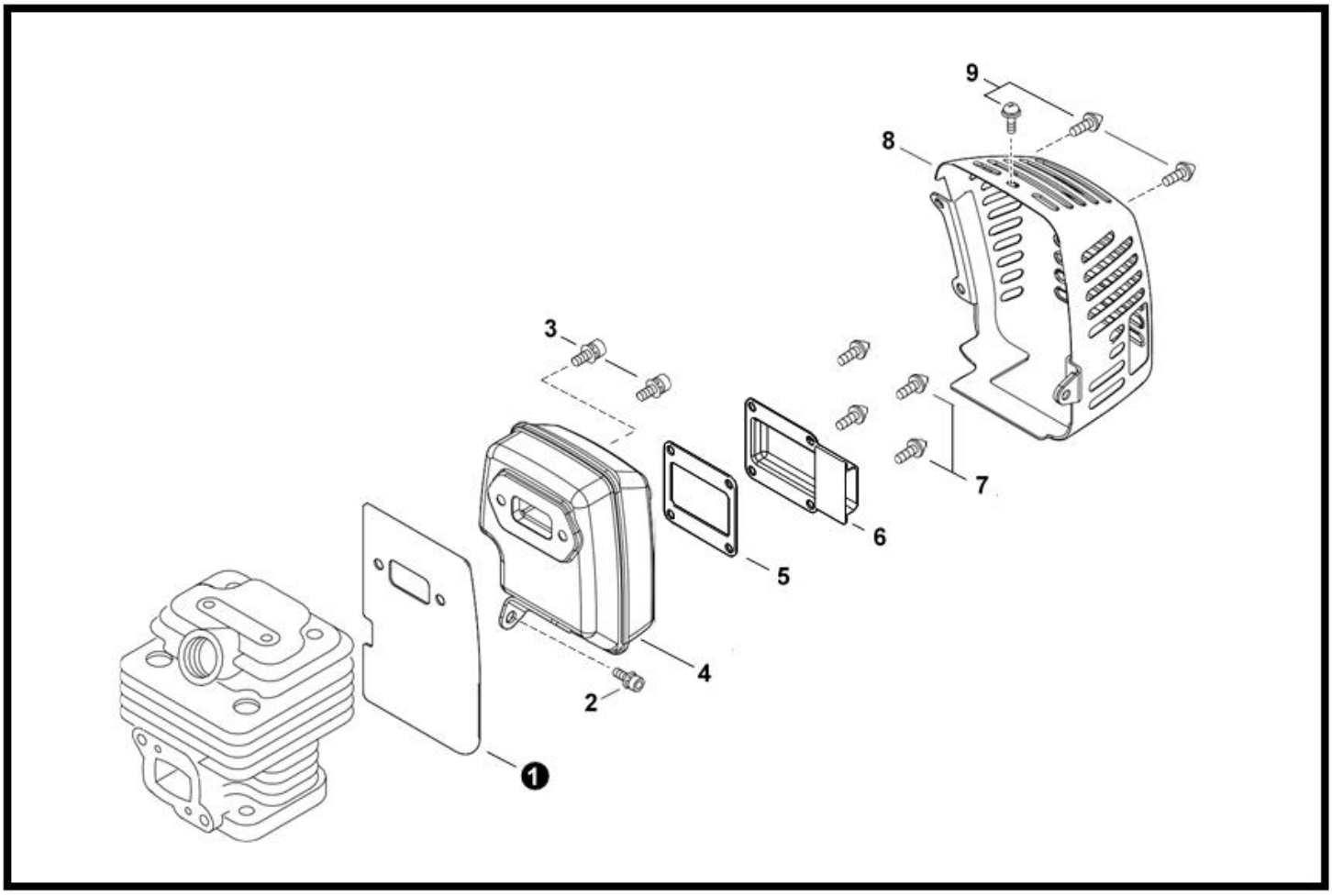

NO.	ECHO P/N	SHINDAIWA P/N	UBI	QTY.	DESCRIPCIÓN	DESCRIPTION
1	V104002450	S500000126	Z-60	1	EMPAQUE SILENCIADOR B451 Z-60	COVER ASSY, AIR FILTER
2	9111805014	S500000406		1	PERNO 5X 4	THUMBSCREW
3	90016205020	1102205200	B5	2	PERNO CAMPANA B45/C35/GP45/450 Z-1	FILTER, AIR
4	14561047530	E500000453	Z-37	1	SILENCIADOR SRM4605/B460 Z-37	SCREW 5x64
5	14586643131	E500002059	Z-53	1	EMPAQUE ESCAPE SRM4605 Z-53	PLATE, PREVENT
6	14586747530	E500001202	Z-45	1	GUIA ESCAPE SILENCIADOR SRM4605 Z-45	CASE ASSY, AIR FILTER
7	90023804010	E500000854	Z-42	4	PERNO MOTOSIERRA CS1201 Z-42	GASKET, INTAKE
8	A320000890	E500000134	Z-35	1	PROTECTOR EXHOSTO SRM4605 Z-35	BOLT 5x25
9	90023804010	E500000854	Z-42	3	PERNO MOTOSIERRA CS1201 Z-42	INSULATOR, INTAKE

BOBINA
IGNITION

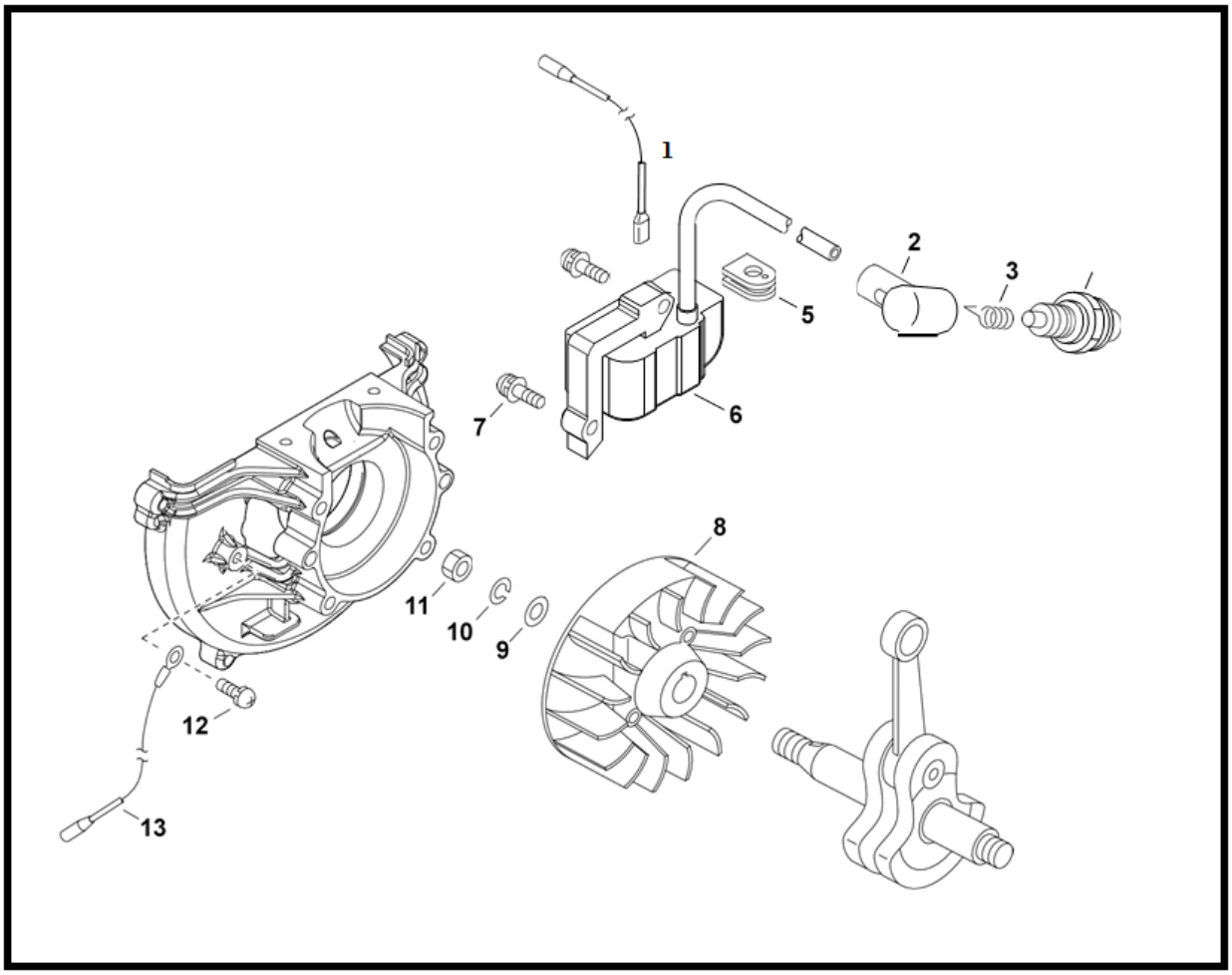

NO.	ECHO P/N	SHINDAIWA P/N	UBI	QTY.	DESCRIPCIÓN	DESCRIPTION
1	16202142230	E500000865	Z-42	1	CABLE BOBINA SRM4300/B430 Z-42	LEAD
2	15901201620	E500000872	Z-42	1	TAPON BUJIA PPT2400 Z-42	CAP, SPARK PLUG
3	15901103432	E500000451	Z-36	1	RESORTE TAPON BUJIA SRM4605/B460 Z-36	TERMINAL, SPARK PLUG
4	99944500071R	E500001435	Z-7	1	BUJIA NGK B451/B430/SRM4610/SRM4300 Z-7	SPARK PLUG - BPM7A
5	15611240630	E500000700	Z-40	1	ABRAZADERA DE BOBINA SHP800 Z-40	GROMMET
6	A411001880	S500000127	Z-7	1	BOBINA DE ENCENDIDO Z-7	COIL, IGNITION
7	90023805020	E500001037	Z-43	2	PERNO BOBINA SRM4605/B460 Z-43	SCREW 5x20
8	A409001380	S500000387		1	VOLANTE B45-1	FLYWHEEL
9	90060000010	E500002585	Z-59	1	ARANDELA BASE GIRATORIOS RM4300LA Z-59	WASHER 10.5x18x1.6
10	90060500010	0160010251	Z-9	1	ARANDELA MUELLE C35/B45/BP35 Z-9	WASHER, SPRING 10
11	90050300010	0151110061	Z-9	1	TUERCA SISTEMA ENCEDIDO C35/B45/BP35 Z-9	NUT 10x1.25
12	90023805010	E500001034	Z-43	1	PERNO SMB 5X10 SRM4605/B460 Z-43	SCREW 5x10
13	15663543130	E500000866	Z-42	1	CABLE TIERRA SRM4300/B430 Z-42	LEAD - GROUND

ARRANCADOR
STARTER

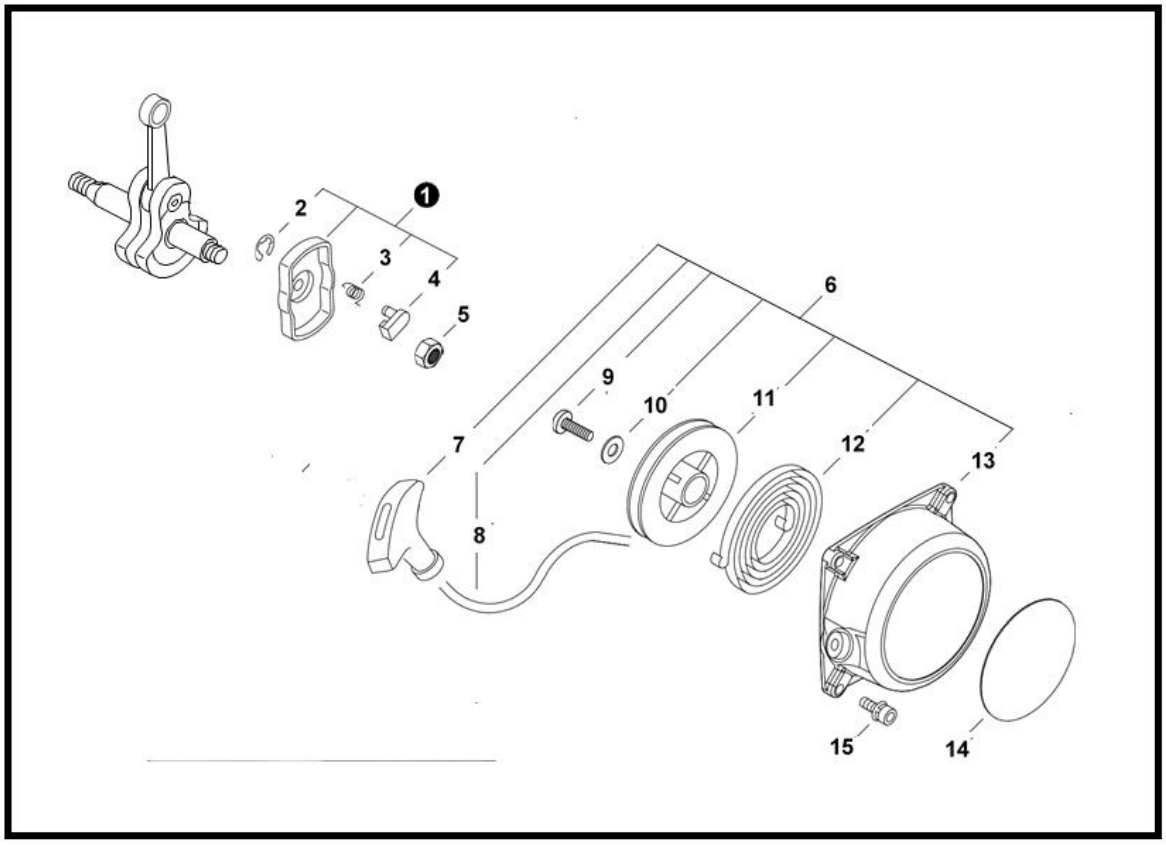

NO.	ECHO P/N	SHINDAIWA P/N	UBI	QTY.	DESCRIPCIÓN	DESCRIPTION
1	**A052000370**	**E500000632**	**Z-7**	**1**	**POLEA ARRANCADOR SRM4506/3605/B460 Z-7**	**PAWL ASSY, STARTER**
2	P022002100	2002475240	Z-13	1	SEGURO DEL PASADOR C27/C350 Z-13	E-RING 4
3	17723440630	2002475230	D1	1	RESORTE ARRANCADOR SHP800/B45LA Z-2	SPRING, RETURN
4	17721840630	E500000331	0	1	TRINQUETE ARRANCADOR 6110	PAWL, STARTER
5	90050200008	E500001431	Z-46	1	TUERCA 8X1.25 SHP800/SRM4300/4605 Z-46	NUT 8x1.25
6	**A051000160**	**E500000504**	**Z-37**	**1**	**ARRANCADOR COMPLETO SRM3800 Z-37**	**STARTER ASSY**
7	17722811120	E500001456	Z-46	1	AGARRE ARRANCADOR DM6110 Z-46	GRIP, STARTER
8	17722601110	E500000939	Z-42	1	CUERDA ARRANCADOR 3605/4605/B460 Z-42	ROPE, STARTER 4.0x880
9	17723640630	2003575170	Z-13	1	PERNO ARRANCADOR C230/T230 Z-13	SCREW
10	17721441030	E500002060	Z-53	1	ARANDELA ARRANCADOR B460/SRM4605 Z-53	WASHER
11	17721543130	7013175120	B2	1	TAMBOR ARRANQUE C350/B45LA/C350 +2	REEL, ROPE
12	17722040630	2002475130	C1	1	RESORTE ESPIRAL C350/SHP800 Z-2	SPRING, RECOIL
13	P022047670	E500002523	Z-59	1	TAPA ARRANCADOR B451/SRM4510 Z-59	CASE, STARTER
14	X562000220	S500000407		1	ETIQUETA ARRANCADOR B45-1	LABEL - STARTER - SHINDAIWA
15	9111804020	E500001035	Z-7	4	PERNO TAPA ARRANCADOR SRM4605 Z-7	BOLT 4x20

SISTEMA DE COMBUSTIBLE

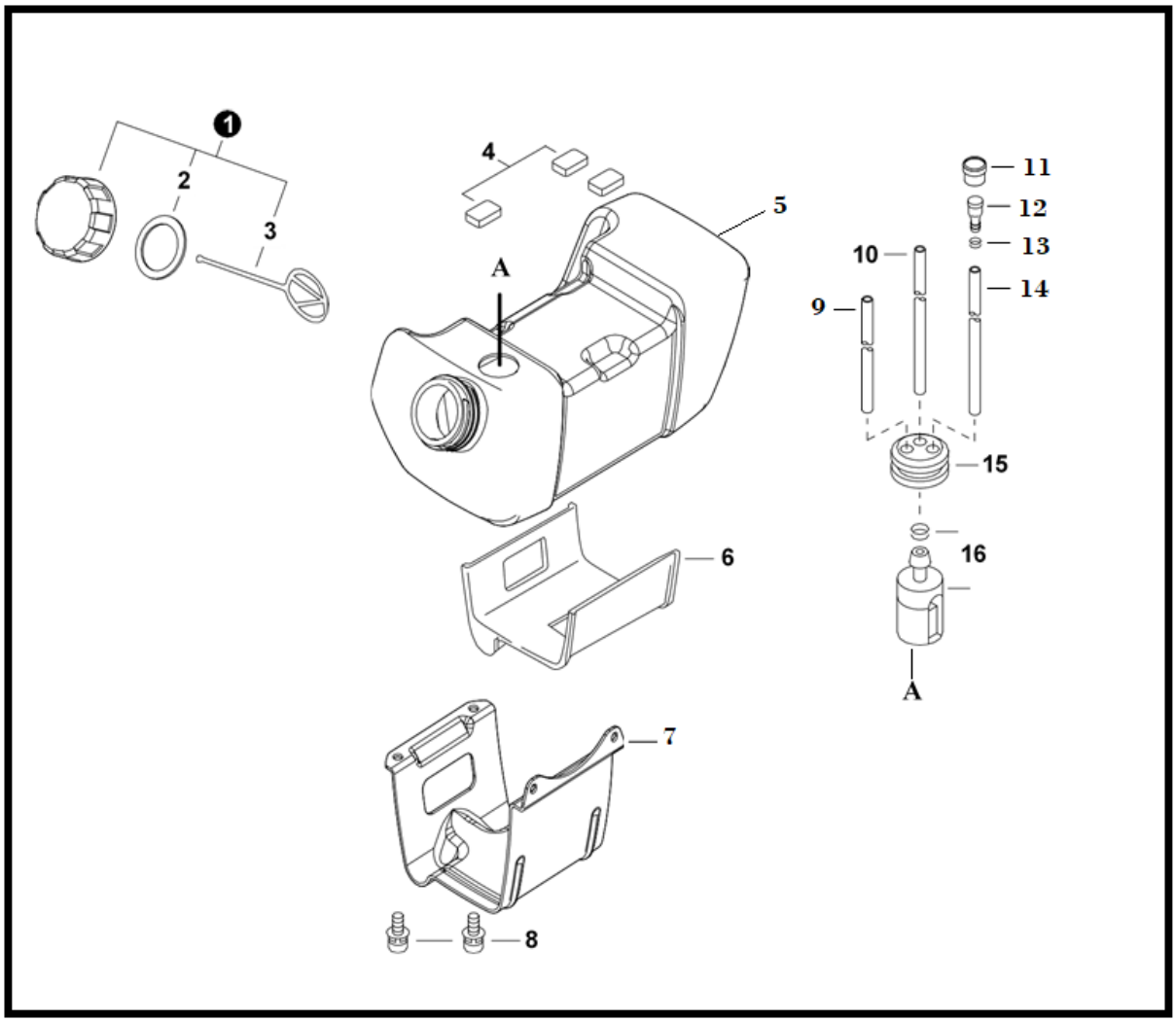

NO.	ECHO P/N	SHINDAIWA P/N	UBI	QTY.	DESCRIPCIÓN	DESCRIPTION
1	P021014061	S500000373	Z-63	1	TAPA DE COMBUSTIBLE EB600 Z-63	CAP ASSY, FUEL
2	V107000190	E500000021	Z-5	1	EMPAQUE TAPA COMBUSTIBLE B430/4300 Z-5	GASKET, FUEL CAP
3	13105156030	S500000128	Z-60	1	CONECTOR TAPA Z-60	CONNECTOR, CAP L= 100 MM
4	13192311120	E500000303	Z-6	3	AMORTIGUADOR TANQUE SRM4605/B460 Z-6	CUSHION
5	13101046931	E500000304	Z-35	1	TANQUE COMBUSTIBLE SOLO B460/451 Z-35	TANK, FUEL
6	13192443130	E500002057	Z-53	1	AMORTIGUADOR TANQUE B460/SRM4605 Z-53	CUSHION, FUEL TANK
7	13191043130	E500002058	Z-55	1	SOPORTE TANQUE SRM4605 Z-55	BRACKET, FUEL TANK
8	90023805014	E500000579	Z-38	2	PERNO ARRANCADOR SRM4605/B460 Z-38	BOLT 5x14
9	13201256030	S500000129	Z-60	1	TUBERIA COMBUSTIBLE B451 AMARILLA Z-60	PIPE, FUEL 3x6x80 YELLOW
10	V471001231	E500001267	Z-45	1	TUBO COMBUSTIBLE PB250 Z-45	PIPE, FUEL 3x5x210 BLACK
11	13132840630	E500001740	Z-47	1	SOPORTE RESPIRADERO CS420 Z-47	HOLDER, VENT
12	13130056431	E500001617	Z-47	1	VALVULA DESAHOGO CS3000/420/510 Z-47	VENT ASSY
13	V490001230	E500000247	Z-34	1	SUJETADOR TUBERIA 6110/3000 Z-34	CLIP 6.5 MM
14	V471005421	S500000131	Z-60	1	TUBERIA COMBUSTIBLE NEGRA 1030 Z-60	PIPE, FUEL 3x6x30 BLACK
15	13211555931	E500000026	Z-5	1	RETENEDOR TANQUE B430/SRM4300 Z-5	GROMMET, FUEL
16	V490001240	E500001521	Z-46	1	CLIP 6MM CS420/600/HC152 Z-46	CLIP 6
17	A369000460	E500000153	B3	1	FILTRO COMBUSTIBLE MOTOSIERRAS/CORT Z-6	FILTER, FUEL

CARCASA DE VENTILADOR N/S: U26620001001 - U26620003685

SERIAL TUBO : U26620001001 - U26620003685

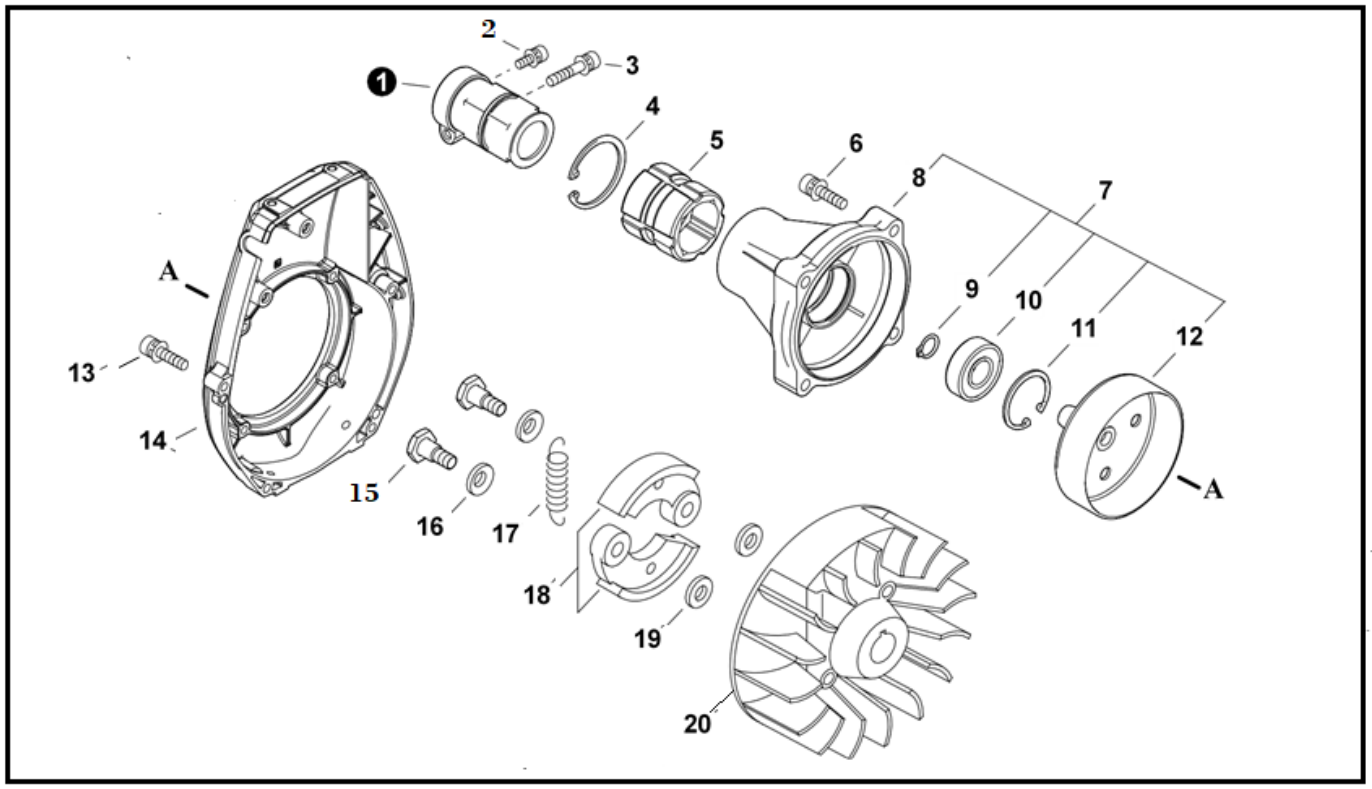

NO.	ECHO P/N	SHINDAIWA P/N	UBI	QTY.	DESCRIPCIÓN	DESCRIPTION
1	P022055260	S500000132	Z-60	1	AMORTIGUADOR TUBO PRINCIPAL Z-60	CUSHION, MAIN PIPE
2	P022055290	S500000408		1	PERNO 5X 12	BOLT 5x12
3	P022055080	S500000409		1	PERNO 6 X 30	BOLT 6x30
4	P022055310	S500000134	Z-60	1	ANILLO RETENEDOR B451 Z-60	RING, SNAP 45
5	P022055270	S500000133	Z-7	1	AMORTIGUADOR TANQUE B451 Z-7	CUSHION
6	P022055340	S500000410		4	TORNILLO TAPA CAMPANA B45-1	BOLT 6x30
7	**P100008630**	**S500000411**		**1**	**TAPA CAMPANA COMPLETA B45-1**	**COVER ASSY, FAN**
8	P022055250	S500000137	Z-61	1	CAJA EMBRAGUE B451 Z-61	CASE, CLUTCH
9	P022055300	S500000136	Z-60	1	ANILLO RETENEDOR CAMPANA B451 Z-60	RING, SNAP 15
10	90080406001	0200206001	Z-1	1	COJINETE CAJA ENG. C-35.B45.C350. Z-1	BEARING, BALL
11	90070200028	0243228120	Z-1	1	ANILLO RETEN CAJA ENG.C-35.C350.4605.Z-1	RING, SNAP 35
12	P022055280	S500000135	Z-7	1	CAMPANA EMBRAGUE B451 Z-7	DRUM, CLUTCH
13	9111805025	E500002070	Z-53	4	TORNILLO 5X25 B460/SRM4605/SRM3605 Z-53	BOLT 5x25
14	A172003540	S500000412		1	CUBIERTA MOTOR SOLA B45-1	COVER, FAN
15	A557000000	E500002063	Z-53	2	PERNO EMBRAGUE B460/SRM4602 (2014) Z-53	BOLT
16	17504803920	E500000300	Z-6	2	ARANDELA(A)EMBRAGUE SRM4605 B460 Z-6	WASHER, WAVE
17	A566000260	E500002324	Z-7	1	RESORTE EMBRAGUE SRM4605/B460 Z-7	SPRING, CLUTCH
18	P021051120	E500002403	Z-57	1	EMBRAGUE 2 ZAPATAS RM-4300LA SOLO Z-57	CLUTCH SHOE SET
19	17504903920	E500000302	Z-34	2	ARANDELA(B)EMBRAGUE SRM4605 Z-34	WASHER 8.2x17x1.6
20	A409001380	S500000387		1	VOLANTE B45-1	FLYWHEEL

CARCASA DE VENTILADOR N/S: U26620003686 - U26620999999

SERIAL TUBO: U26620003686 - U26620999999

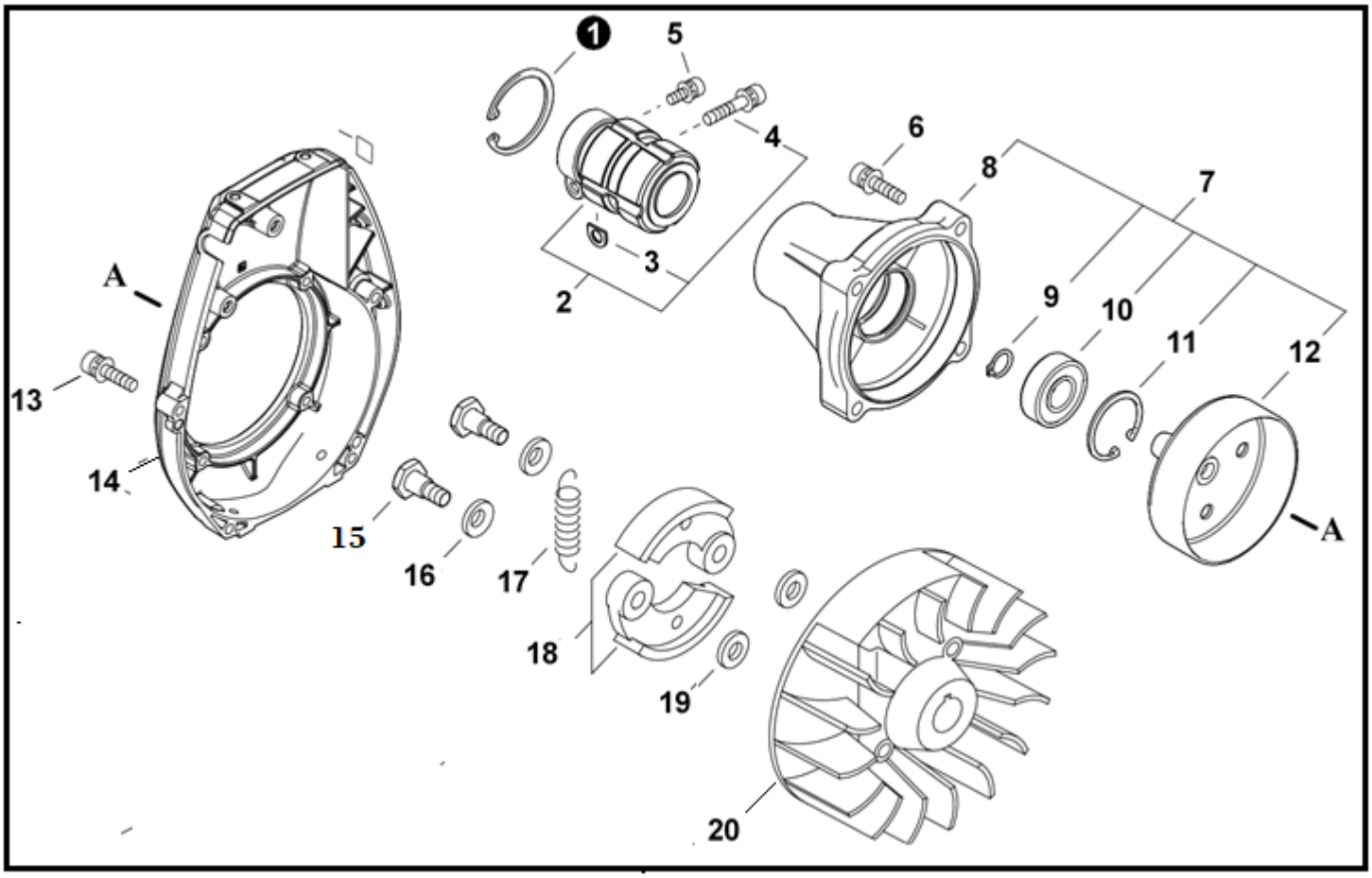

NO.	ECHO P/N	SHINDAIWA P/N	UBI	QTY.	DESCRIPCIÓN	DESCRIPTION
1	P022055310	S500000134	Z-60	1	ANILLO RETENEDOR B451 Z-60	RING, SNAP 45
2	**P200001480**	**S500000413**		**1**	**AMORTIGUADOR COMPLETO B45-1**	**CUSHION ASSY, MAIN PIPE**
3	P022062100	S500000414		1	ARANDELA TIPO D AMORTIGUADOR B45-1	D-WASHER
4	P022055080	S500000409		1	PERNO 6 X 30	BOLT 6x30
5	P022055290	S500000408		1	PERNO 5X 12	BOLT 5x12
6	P022055340	S500000410		4	TORNILLO TAPA CAMPANA B45-1	BOLT 6x30
7	**P100008630**	**S500000411**		**1**	**TAPA CAMPANA COMPLETA B45-1**	**COVER ASSY, FAN**
8	P022055250	S500000137	Z-61	1	CAJA EMBRAGUE B451 Z-61	CASE, CLUTCH
9	P022055300	S500000136	Z-60	1	ANILLO RETENEDOR CAMPANA B451 Z-60	RING, SNAP 15
10	90087236202	0200206202	Z-1	1	RODAMIENTO CAMPANA B530 ENG HC152	BEARING, BALL
11	90070200028	0243228120	Z-1	1	ANILLO RETEN CAJA ENG.C-35.C350.4605.Z-1	RING, SNAP 35
12	P022055280	S500000135	Z-7	1	CAMPANA EMBRAGUE B451 Z-7	DRUM, CLUTCH
13	9111805025	E500002070	Z-53	4	TORNILLO 5X25 B460/SRM4605/SRM3605 Z-53	BOLT 5x25
14	A172003540	S500000412		1	CUBIERTA MOTOR SOLA B45-1	COVER, FAN
15	A557000000	E500002063	Z-53	2	PERNO EMBRAGUE B460/SRM4602 (2014) Z-53	BOLT
16	17504803920	E500000300	Z-6	2	ARANDELA(A)EMBRAGUE SRM4605 B460 Z-6	WASHER, WAVE
17	A566000260	E500002324	Z-7	1	RESORTE EMBRAGUE SRM4605/B460 Z-7	SPRING, CLUTCH
18	P021051120	E500002403	Z-57	1	EMBRAGUE 2 ZAPATAS RM-4300LA SOLO Z-57	CLUTCH SHOE SET
19	17504903920	E500000302	Z-34	2	ARANDELA(B)EMBRAGUE SRM4605 Z-34	WASHER 8.2x17x1.6
20	A409001380	S500000387		3	VOLANTE B45-1	WASHER 8.2x17x1.7

TUBO PRINCIPAL
MAIN PIPE

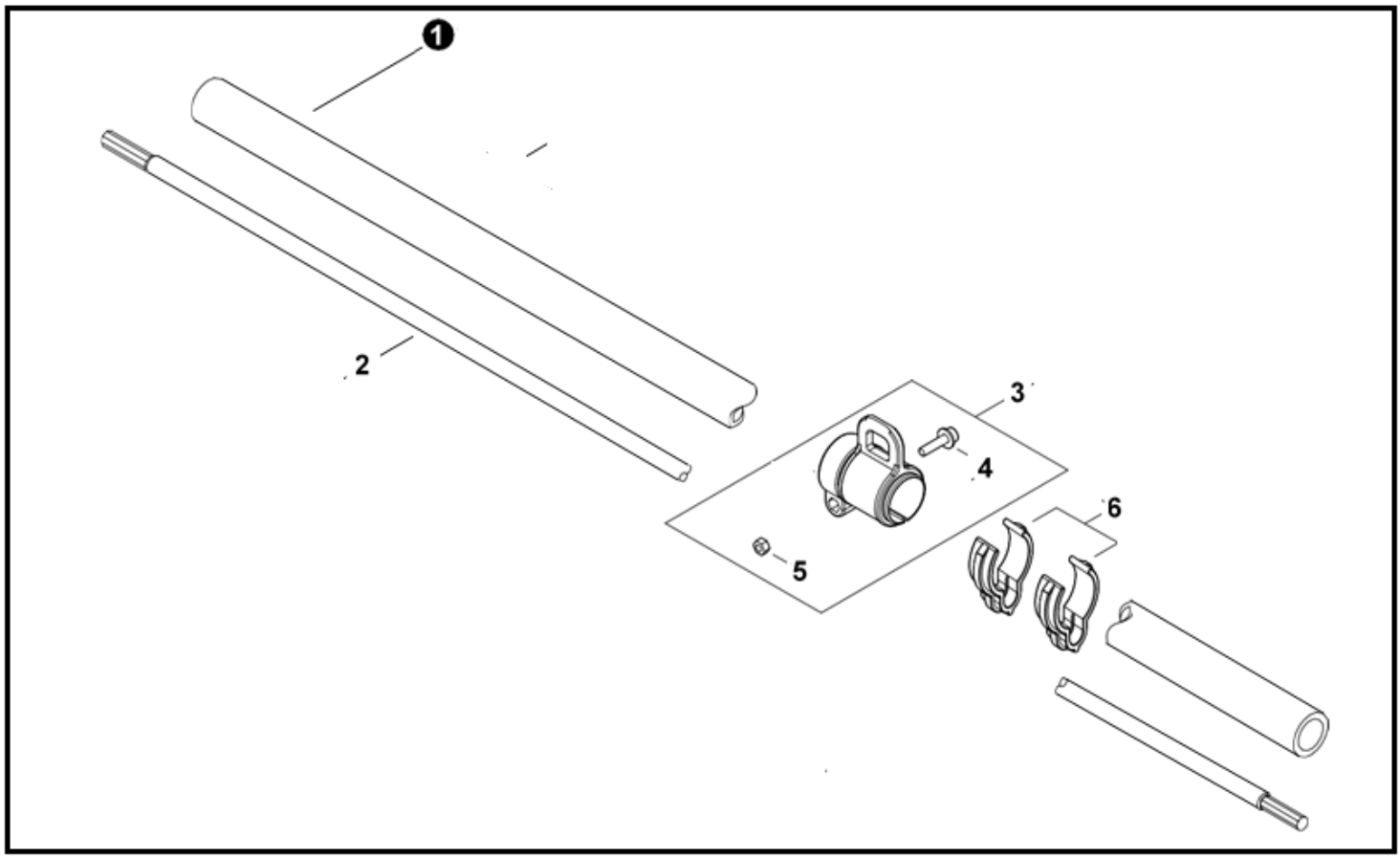

NO.	ECHO P/N	SHINDAIWA P/N	UBI	QTY.	DESCRIPCIÓN	DESCRIPTION
1	P100008590	S500000139	T	1	TUBO COMPLETO B451 [T]	MAIN PIPE ASSY
2	P022055110	S500000147	T	1	EJE CENTRAL B451 [T]	DRIVESHAFT
3	P022055130	S500000138	Z-60	1	ABRAZADERA TUBO B451 Z-60	HANGER ASSY, HARNESS
4	90016205020	1102205200	Z-1	1	PERNO CAMPANA B45/C35/GP45/450 Z-1	BOLT 5x20
5	90050200005	0150105031	Z-9	1	TUERCA GATILLO C350/C230 Z-9	NUT
6	22492452930	E500002081	Z-53	1	GANCHO 28MM SRM4605 Z-53	CLIP, CABLE

MANGO EN U
U-HANDLE

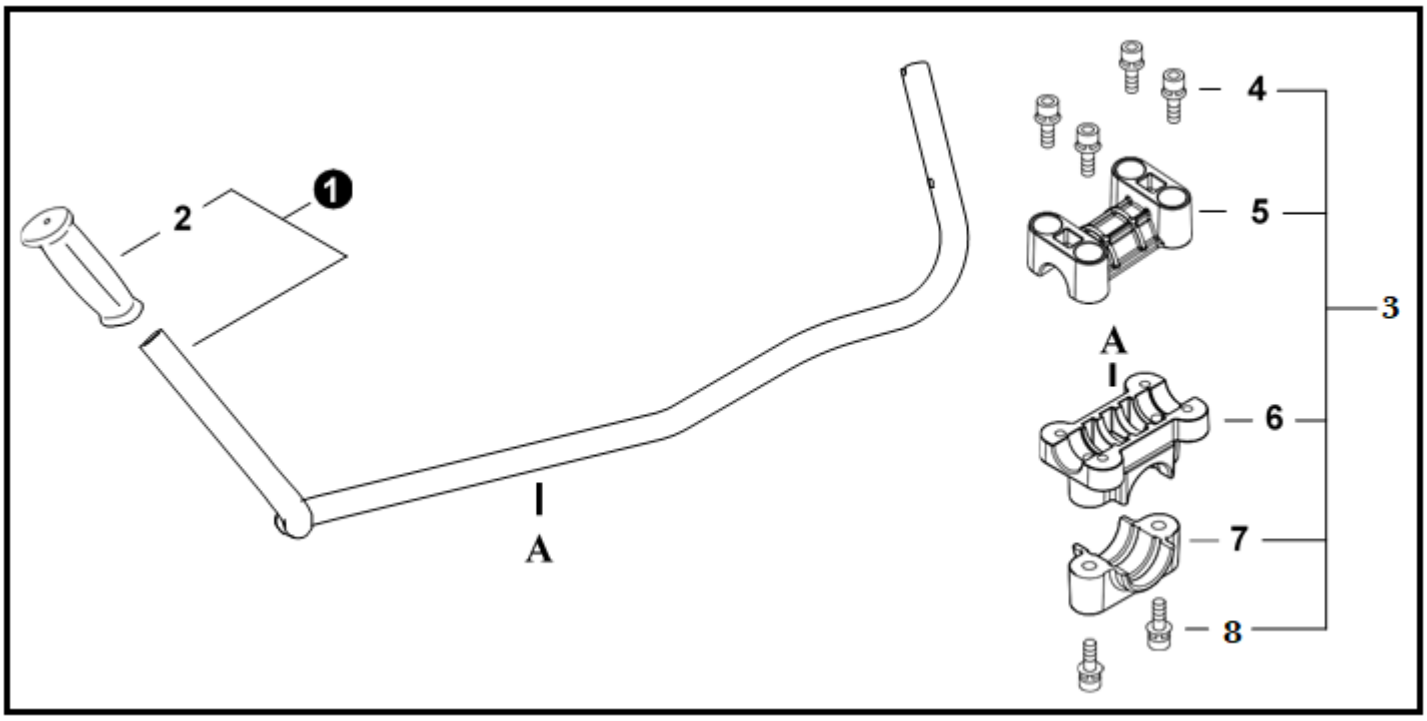

NO.	ECHO P/N	SHINDAIWA P/N	UBI	QTY.	DESCRIPCIÓN		DESCRIPTION
1	P100003860	S500000140	Z-61	1	MANUBRIO SOLO B460/B451	Z-61	U-HANDLE ASSY
2	C403000031	E500002087	Z-55	1	AGARRE MANGO SRM4605 (2014)	Z-55	GRIP, HANDLE
3	P022055180	S500000173		1	SOPORTE MANGO B451		MOUNTING KIT, U-HANDLE
4	P022055230	S500000415		4	PERNO 6X25		BOLT 6x25
5	P022055210	S500000416		1	ABRAZADERA SUPERIOR B45-1		BRACKET, HANDLE - UPPER
6	P022055200	S500000417		1	ABRAZADERA INFERIOR B45-1		BRACKET, HANDLE - LOWER
7	P022055190	S500000418		1	ABRAZADERA TUBO B45-1		BRACKET, MOUNTING
8	P022055220	S500000409		2	PERNO 6X30		BOLT 6x30

MANGO DE CONTROL

CONTROL HANDLE

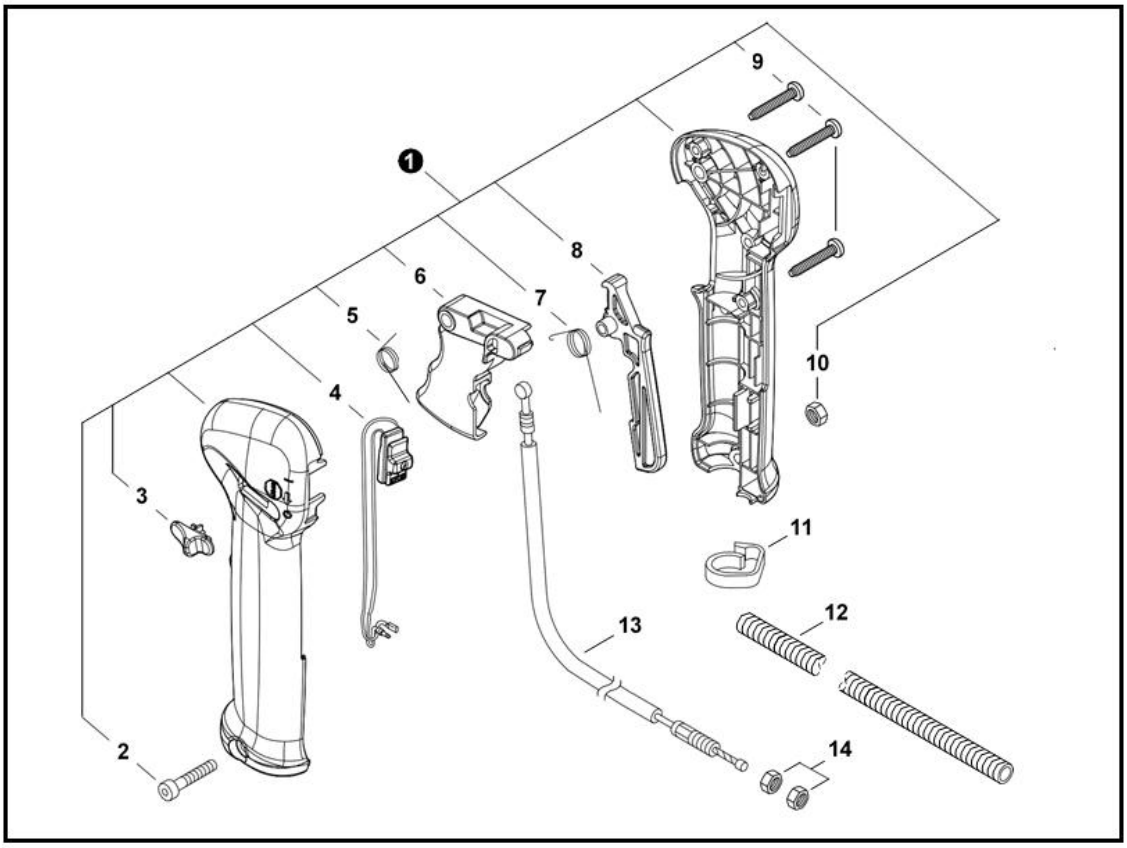

NO.	ECHO P/N	SHINDAIWA P/N	UBI	QTY.	DESCRIPCIÓN	DESCRIPTION
1	P100008640	S500000419		1	MANDO ACELERACION COMPLETO B451-1	CONTROL HANDLE ASSY
2	9111905030	E500002075	Z-53	1	PERNO 5X30 B460/SRM4605 Z-53	BOLT - 5x30
3	C463000090	S500000420		1	SEGURO DEL ACELERADOR B45-1	LATCH, THROTTLE
4	A440003120	S500000142	Z-60	1	INTERUPTOR DE ENCENDIDO B451 Z-60	SWITCH, ON-OFF
5	V452000360	E500002079	Z-53	1	RESORTE GATILLO B460/SRM4605 Z-53	SPRING, TORSION
6	C450000790	S500000421		1	GATILLO ACELERADOR B45-1	CONTROL, THROTTLE
7	V452000350	E500002080	Z-53	1	RESORTE SEGURO B460/SRM4605 (2014) Z-53	SPRING, TORSION
8	C460000430	S500000422		1	SEGURO GATILLO B45-1	LOCKOUT, THROTTLE
9	90025604016	E500001628	Z-47	3	TORNILLO 4X16 CS3000/SRM4605 Z-47	SCREW 4x16
10	90050000005	E500000455	Z-6	1	TUERCA ACELELRADOR B460/SRM4605 Z-6	NUT M5
11	15911209961	E500001147	Z-43	1	SUJETADOR ABRAZADERA MANGO SRM4605 Z-43	CLIP, CABLE
12	V475007760	E500000559	Z-38	1	FUNDA CABLE ACELERACION SRM4300/B430Z-38	TUBE, FLEXIBLE
13	V430005261	S500000141	Z-61	1	CABLE ACELERACION B451 Z-61	CABLE, THROTTLE
14	90050200006	E500000434	Z-36	2	TUERCA # 6 DM 6110 Z-36	NUT M6

CAJA DE ENGRANAJES
GEAR CASE

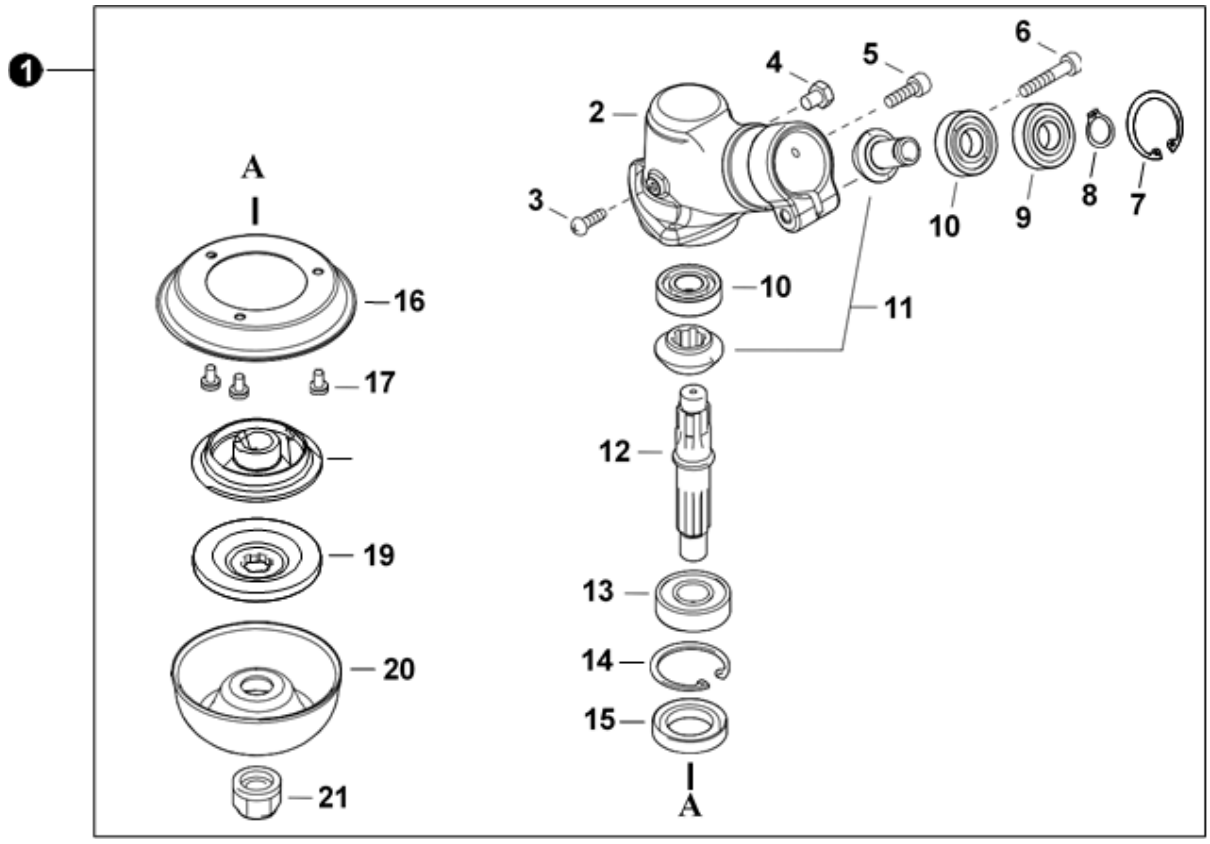

NO.	ECHO P/N	SHINDAIWA P/N	UBI	QTY.	DESCRIPCIÓN	DESCRIPTION
1	P022055470	S500000143	Z-61	1	CAJA DE ENGRANAJES COMPLETA Z-61	GEAR CASE ASSY
2	P002000000	S500000188	Z-7	1	CARCAZA CAJA DE ENGRANAJES B451 Z-7	CASE, GEAR
3	P022055460	E500001106	Z-43	1	TORNILLO PLACA GUIA CS510 Z-43	BOLT 4x10
4	P022055060	0101406100	B5	1	PERNO GRASA C230/C250/T20 Z-1	BOLT 6x8
5	P022055070	E500001643	Z-47	1	PERNO 5X14 CS3000/420/510 Z-47	BOLT 5x14
6	P022055080	S500000409		1	PERNO 6 X 30	BOLT 6x30
7	P022055010	0243228120	Z-1	1	ANILLO RETEN CAJA ENG.C-35.C350.4605.Z-1	RING, SNAP 28
8	P022055000	E500001361	Z-46	1	ANILLO RETEN 12 Z-46	RING, SNAP 12
9	90080306001	0200206001	Z-1	1	COJINETE CAJA ENG. C-35.B45.C350. Z-1	BEARING, BALL 6001Z
10	90080036001	3707463310	Z-4	2	COJINETE CAJA ENG.C35/B45/3605/4605 Z-4	BEARING, BALL 6001
11	P100008580	S500000145	Z-60	1	KIT PIONES CAJA B451 Z-60	GEAR SET, BEVEL
12	P022054930	S500000144	Z-60	1	EJE CAJA DE ENGRANAJE B451 Z-60	SHAFT, GEAR
13	P022055680	0200206202	Z-1	1	RODAMIENTO CAMPANA B530 ENG HC152 Z-1	BEARING, BALL
14	P022055020	0243235150	Z-1	1	ANILLO RETENCION CAJA ENG.C-35.B45. Z-1	RING, SNAP 35
15	P022055030	S500000146	Z-60	1	RETEN ACEITE B451 Z-60	SEAL, OIL
16	P022054970	S500000194	Z-62	1	PROTECTOR POLVO B451 Z-62	COVER, GEAR CASE
17	P022055050	S500000195	Z-62	3	TORNILLO PROTECTOR POLVO B451 Z-62	BOLT 4x8
18	P022054940	S500000196	Z-62	1	PLATO ADAPTADOR SUPERIOR B451 Z-62	PLATE, ADAPTOR - UPPER
19	P022054950	S500000197	Z-62	1	PLATO ADAPTADOR INFERIRO B451 Z-62	PLATE, ADAPTOR - LOWER
20	P022054960	S500000198	Z-62	1	PLATO EXTERIOR CAJA ENGRANAJE B451 Z-62	ADAPTOR, SAW
21	P022055040	S500000369	Z-63	1	TUERCA CAJA CUCHILLA B451/SRM4610 Z-63	NUT 12

PROTECTOR CONTRA RESIDUOS

DEBRIS SHIELD

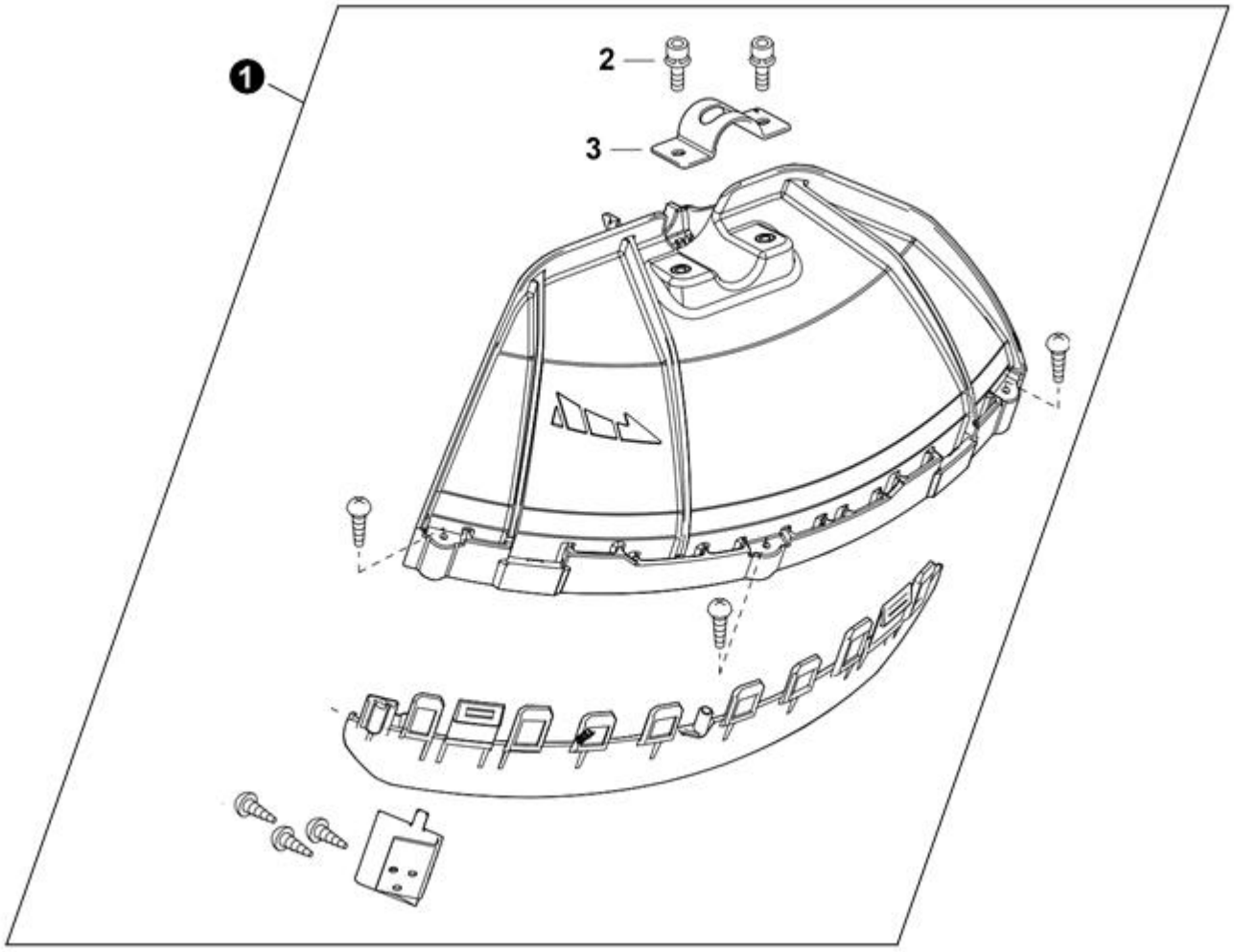

NO.	ECHO P/N	SHINDAIWA P/N	UBI	QTY.	DESCRIPCIÓN	DESCRIPTION
1	C055000090	S500000174		1	PROTECTOR PIEDRA B451	SHIELD ASSY, DEBRIS
2	P022055420	E500001457	Z-46	2	PERNO 6X20 B450/DM6110 Z-46	BOLT 6x20
3	P022055430	S500000423		1	ABRAZADERA PROTECTOR PIEDRA B45-1	BRACKET, SHIELD

ARNÉS
HARNESS

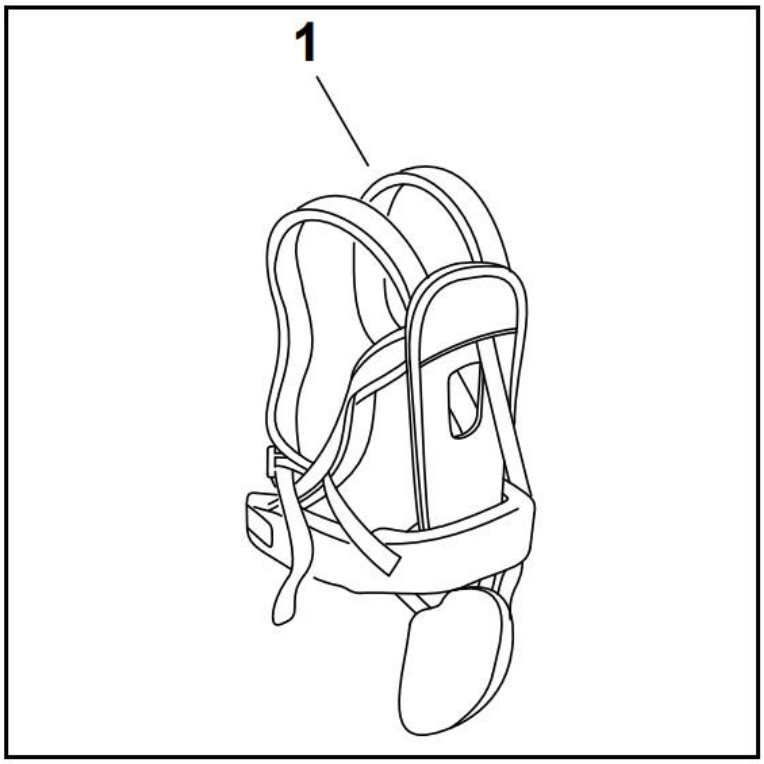

NO.	ECHO P/N	SHINDAIWA P/N	UBI	QTY.	DESCRIPCIÓN	DESCRIPTION
1	C062000560	E500002401	[AC]	1	ARNES COMPLETO B430/B460 [AC]	HARNESS, SHOULDER

HERRAMIENTAS
TOOLS

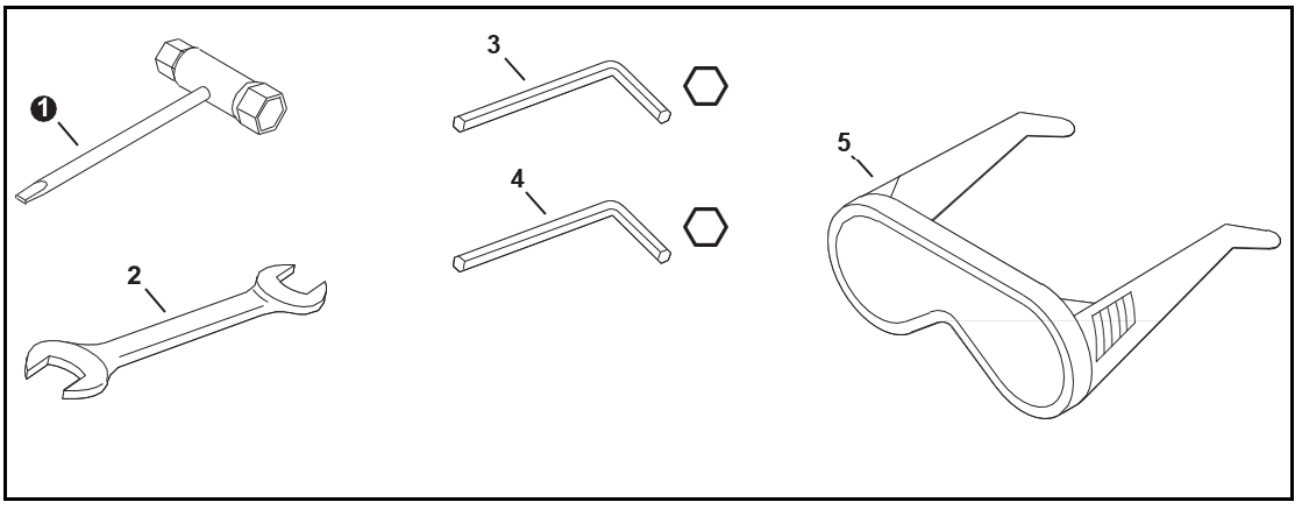

NO.	ECHO P/N	SHINDAIWA P/N	UBI	QTY.	DESCRIPCIÓN	DESCRIPTION
1	P022055350	7251891180	3	1	LLAVE BUJIA B450/B45/C35/B45LA +3	T-WRENCH 17x19
2	P022055360	2215091570	Z-17	1	LLAVE FIJA 695/575/HT20 Z-17	SPANNER 8x10
3	P022055370	0902604001	Z-1	1	LLAVE BRISTOL (4) Z-1	WRENCH, ALLEN M4
4	P022055380	0902605001	Z-1	1	LLAVE BRISTOL (5) Z-1	WRENCH, ALLEN M5
5	X690000080	055107		1	MONOGAFA SEGURIDAD SHINDA	GLASSES, SAFETY

TUBO AL POR MAYOR

BULK PIPE

NO.	ECHO P/N	SHINDAIWA P/N	UBI	DESCRIPCIÓN	DESCRIPTION
1	90014	S500000424		TUBO AL POR MAYOR 3x5 MM NEGRO (4 PIEZASx2 M)	BULK PIPE - 3x5 MM BLACK (4 PIECESx2 M)
2	90017	S500000425		TUBO AL POR MAYOR 3x6 MM TRANSPARENTE (4 PIEZASx2 M)	BULK PIPE - 3x6 MM CLEAR (4 PIECESx2 M)

CUERDA DEL ARRANCADOR AL POR MAYOR

BULK STARTER ROPE

NO.	ECHO P/N	SHINDAIWA P/N	UBI	DESCRIPCIÓN	DESCRIPTION
1	99944440000	S500000426		CUERDA DEL ARRANCADOR AL POR MAYOR 3.0 MMx61 M	BULK STARTER ROPE - 3.0 MMx61 M
2	99944450000	S500000427		CUERDA DEL ARRANCADOR AL POR MAYOR 4.0 MMx61 M	BULK STARTER ROPE - 4.0 MMx61 M
3	99944455000	S500000428		CUERDA DEL ARRANCADOR AL POR MAYOR 4.4 MMx61 M	BULK STARTER ROPE - 4.4 MMx61 M