shindaiwa®

Illustrated Parts List
Lista de Piezas

B530 Brushcutter
B530 Desmalezadora



SERIAL NUMBERS / NÚMEROS DE SERIE

T24326001001 - T24326999999

ENGINE 2
MOTOR

ENGINE COVER 3
TAPA DEL MOTOR

CARBURETOR 4
CARBURADOR

INTAKE / AIR FILTER 6
ADMISIÓN / FILTRO DE AIRE

EXHAUST 7
ESCAPE

RECOIL STARTER 8
ARRANCADOR AUTORRETRÁCTIL

IGNITION 9
ENCENDIDO

FUEL SYSTEM 10
SISTEMA DE COMBUSTIBLE

FAN COVER 11
CUBIERTA DEL VENTILADOR

THROTTLE CONTROL / SUPPORT HANDLE 12
CONTROL DEL ACELERADOR / MANGO DE SOPORTE

CLUTCH 14
EMBRAGUE

MAIN PIPE 15
TUBO PRINCIPAL

GEAR CASE 16
CAJA DE ENGRANAJES

DEBRIS SHIELD / HARNESS 18
PROTECTOR / ARNÉS

TOOLS 19
HERRAMIENTAS

12 de marzo de 2026

ENGINE /MOTOR

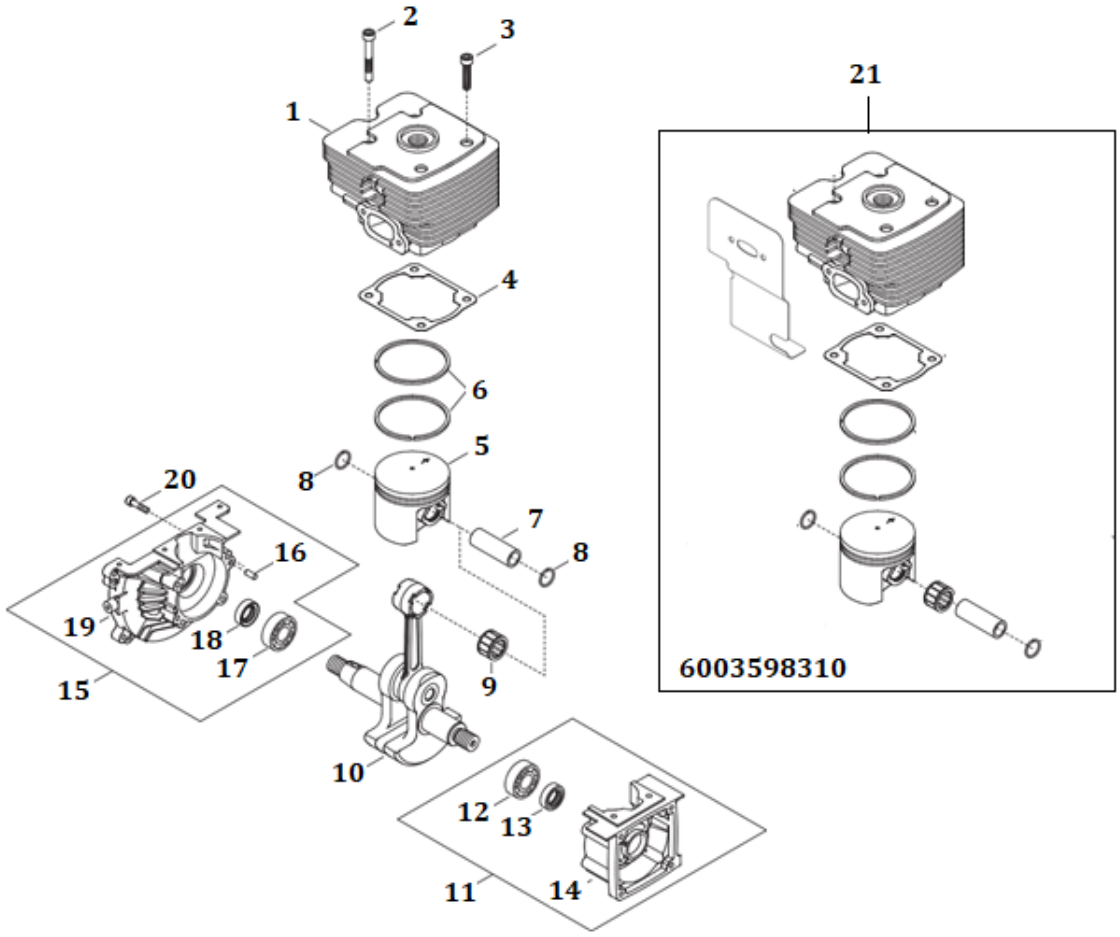

NO.	ECHO P/N	SHINDAIWA P/N	QTY.	DESCRIPCIÓN	DESCRIPTION
1	A130001780	6203512111	1	CILINDRO B530	CYLINDER
2	90010505035	0102005350	1	PERNO CARTER 360 C230 ,HT20,T18,695 5	SCREW - 5×35
3	90010505025	0102005250	3	PERNO CILINDROC35,BP-35,GP-25,T-20,C250	BOLT 5×25
4	V100000450	6203512120	1	EMPAQUE CILINDRO B530	GASKET, CYLINDER
5	A100000680	6203541110	1	PISTON B530	PISTON
6	A101000370	6203541120	2	ANILLOS B530 PISTON *2	RING, PISTON
7	V609000050	6203541210	1	PASADOR PISTON B 530	PIN, PISTON 11
8	V580000100	2215241231	2	ANILLO RETENEDOR B45-577 GP45	RING, SNAP
9	V556000030	2215041280	1	COJINETE CIGUENAL 575.577.....	BEARING, NEEDLE
10	A011000840	6203542010	1	CIGUENAL B 530	CRANKSHAFT
11	P021027760	6203521010	1	TAPA CARTER S B530	CRANKCASE ASSY, S
12	90081036202	0203006202	1	COJINETE CAJA ENG. C-35 B-45 SRM4300 S	BEARING, BALL 6202
13	V508000050	2001021211	1	RETEN CARTER C35,B45.C350.GP45/450 BP35	SEAL, OIL 16
14	A172001270	6203531110	1	CUBIERTA VOLANTE B 530	CRANKCASE S
15	P021027770	6203521020	1	TAPA CARTER M B530	CRANKCASE ASSY, M
16	90033050100	E500001894	2	PIN POSICION 5X10 CS600 680 SRM4605	PIN, LOCATING 5×10
17	90081036202	0203006202	1	COJINETE CAJA ENG. C-35 B-45 SRM4300 S	BEARING, BALL 6202
18	V508000050	2001021211	1	RETEN CARTER C35,B45.C350.GP45/450 BP35	SEAL, OIL 16
19	A120000380	6203521210	1	TAPA CARTER	CRANKCASE M
20	90010505030	0102005300	4	PERNO CARTER C-35,C350,GP45,GP450.....	BOLT 5×30
21	P021036030	6003598310	1	KIT REPARACION B 530	KIT REPARACION B 530

ENGINE COVER
TAPA DEL MOTOR

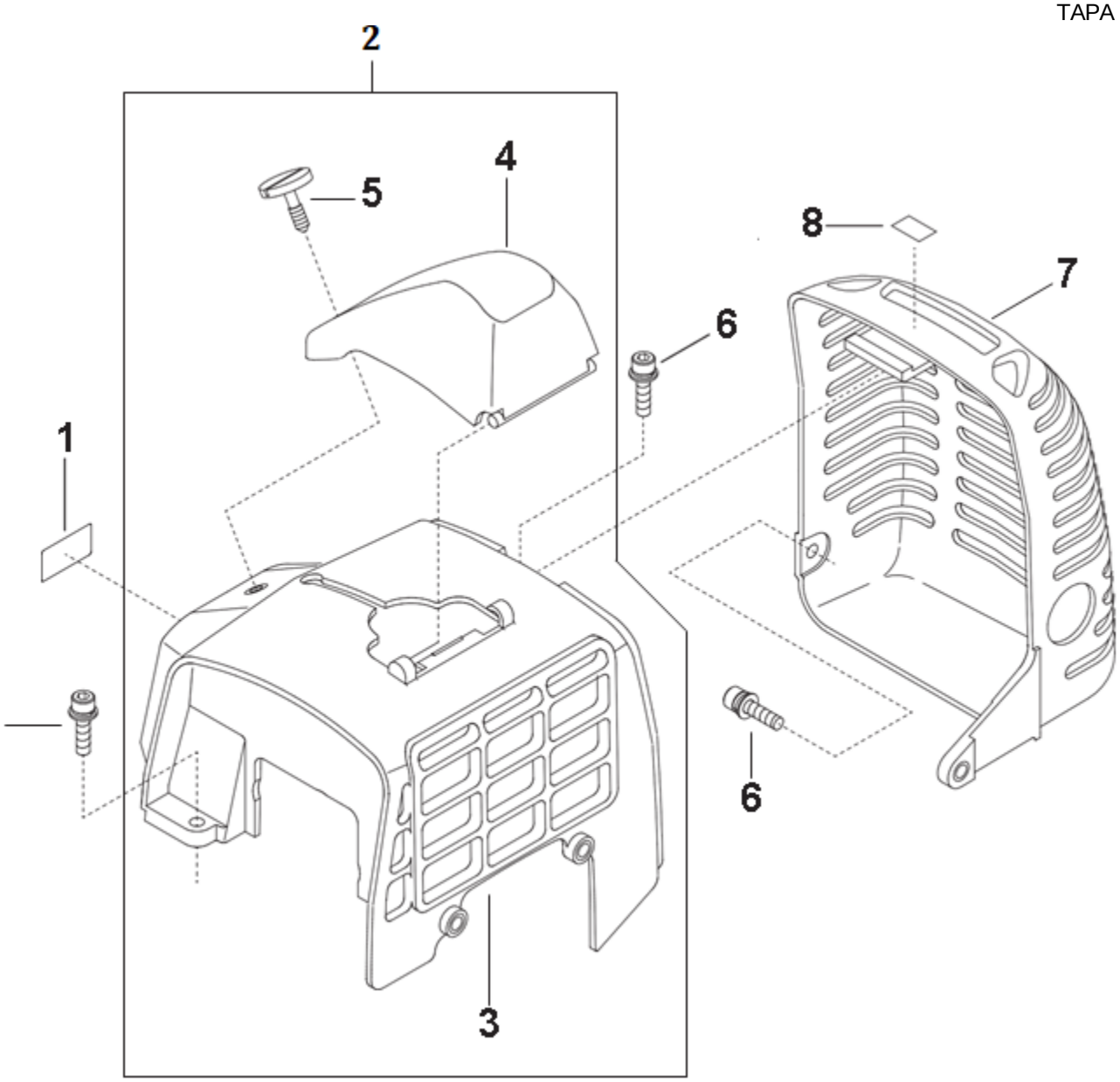

NO.	ECHO P/N	SHINDAIWA P/N	QTY.	DESCRIPCIÓN	DESCRIPTION
1	X504002660	6203591020	1	ETIQUETA	LABEL TRADE
2	P021027790	6203532012	1	CUBIERTA CILINDRO COMPLETA	COVER ASSY, ENGINE
3	A160001650	6203532112	3	CUBIERTA CILINDRO B 530	+COVER, ENGINE
4	A429000120	6203532310	1	CUBIERTA BUJIA B 530	+COVER, SPARK PLUG
5	V299000390	6203532320	1	TORNILLO CUBIERTA BUJIA B 530	+THUMBSCREW
6	V203000590	1102205160	2	PERNO TAPA CAMPANA B45 C35 C350 B45LA	BOLT M5×16
7	A320000790	6203532331	1	CUBIERTA SILENCIADOR B530	MUFFLER COVER
8	X505002310		2	ETIQUETA	LABEL, CAUTION - HOT

CARBURETOR

CARBURADOR

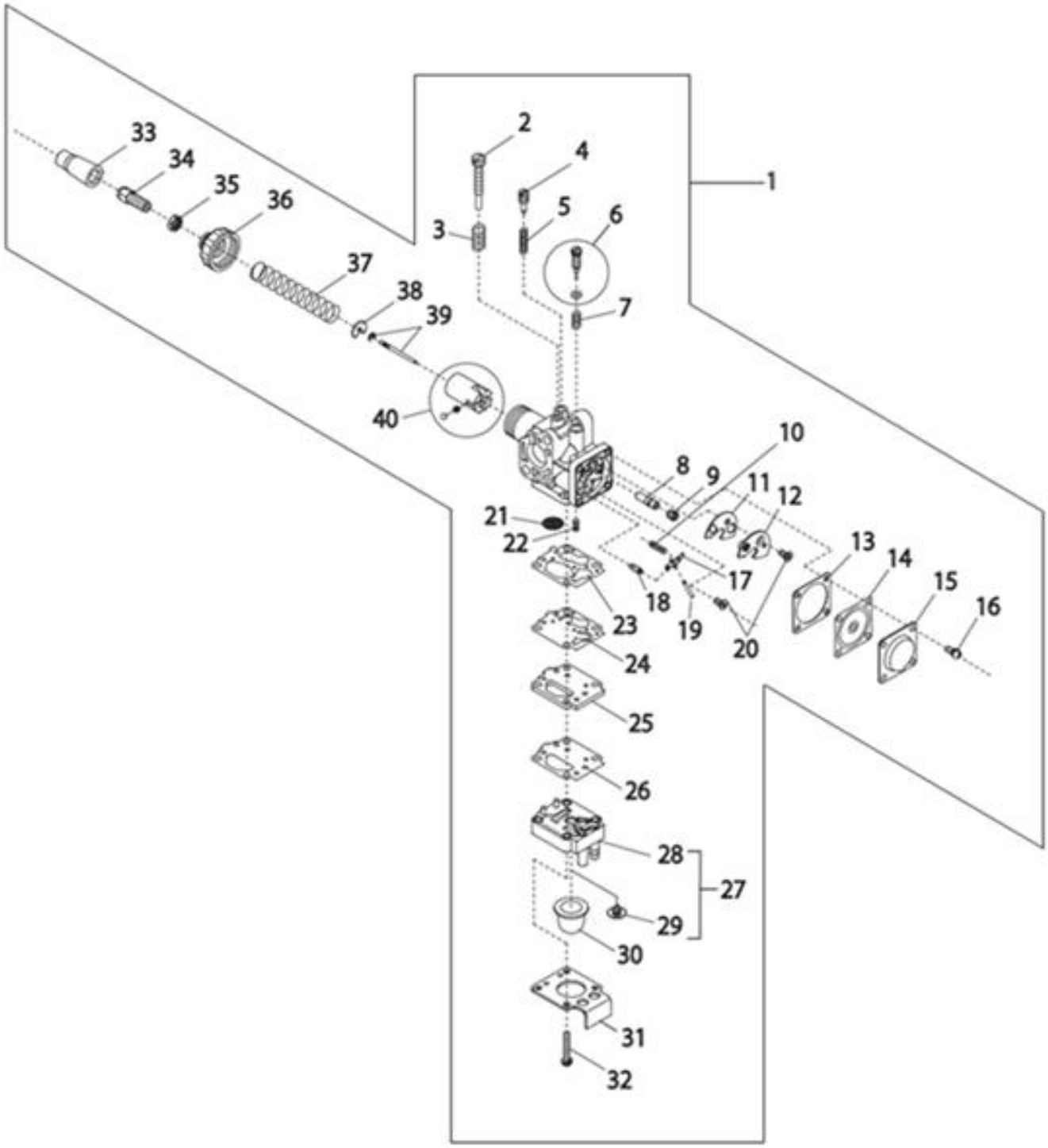

CARBURETOR
CARBURADOR

NO.	ECHO P/N	SHINDAIWA P/N	QTY.	DESCRIPCIÓN	DESCRIPTION
1	A021002570	6203581013	1	CARBURADOR SOLO B530	CARBURETOR B530
2	12415905530	2000081310	1	TORNILLO BAJA VEL.CARBC35BP35 GP45/25 18	SCREW, IDLE ADJUST
3	12416011120	7292081820	1	RESORTE CAR B450 B530 B45SHP800 BP35	SPRING, IDLE ADJUST
4	P004000880	2000081330	1	TORNILLO AIRE BAJ.VEL.C35B45 T20 C27	SCREW, SLOW AIR
5	P004000890	2000081340	1	RESORTE CARBURADOR C35.T20.C35.B45.C27.	SPRING
6	12435412710	2007081350	1	TORNILLO AJUSTE T-18 .C250.....	SCREW, MAIN ADJUST
7	12435521330	2001181360	1	RESORTE TORNILLO AJUSTE C35-C20	SPRING, ADJUST
8	P004002730	6203581420	1	AGUJA CARBURADOR B530	NEEDLE, JET
9	P004002980	7021081420	1	SOPORTE AGUJA INYECTORB450	HOLDER, MAIN JET
10	12433149930	2004081430	1	RESORTE LEVER CARB B530 C250	SPRING
11	P004003000	7021081440	1	EMPAQUE VALVULA CARBURADOB 530	PACKING
12	P004003010	7021081451	1	PLACA DIAFRAGMA CARB B530	PLATE
13	12435861830	6203581370	1	EMPAQUE CARBURADOR B 530	GASKET, DIAPHRAGM
14	P004002720	6203581410	1	DIAFRAGMA CARB. B530	DIAPHRAGM, METERING
15	P004001720	2001981670	1	TAPA DIAFRAGMA B530	COVER, DIAPHRAGM
16	P004001000	2000081540	4	TORNILLO TAPA DIAFRAGMA.B45	SCREW M3×8
17	P004001340	2001181451	1	PALANCA CARBURADOR C35/T18/C27/B530	LEVER, INLET CONTROL
18	P004001660	2001981440	1	VALVULA AGUJA CARB B530 C250	VALVE, INLET NEEDLE
19	12433221330	2001181460	1	PASADOR PALANCA CARB.C35.C27.T18	PIN, METERING LEVER
20	P004001350	2001181470	2	TORNILLO CARB. C-35.C27.T18.HT20.C250...	SCREW M3×8
21	P004001640	6850181480	1	MALLA METALICA FILTROB530CABURADOR B 530	SCREEN, FUEL INLET
22	12436755430	6203581360	1	RESORTE TORNILLO AJUSTE B530	SPRING, COIL
23	12436112710	2001981630	1	EMPAQUE CARB.BOMBA SHP800C250	GASKET
24	12436412710	2001981620	1	BOMBA DE DIAFRAGMA SHP800C250	DIAPHRAGM, FUEL PUMP
25	12436212710	E500000222	1	LAMINA BASE BOMBA SHP800CARURADOR	PLATE,PUMP
26	12436312710	2001981660	1	EMPAQ.DIAFRAG.CARB.SHP800.....	GASKET, FUEL PUMP
27	P004002690	6203581340	1	TAPA BOMBA COMPLETA CARB. B 530	COVER ASSY, PUMP
28	P004003250	6203581350	1	CUERPO BOMBA CARBURADOR B530	COVER, PUMP
29	12437455430	6850181340	1	VALVULA TAPA BOMBA B530 CARBURADOR B 53	VALVE, CHECK
30	12438012710	E500000224	1	BOMBA CEBADO C350 SHP800	BULB, PURGE
31	P004002710	6203581390	1	PLACA BOMBA CARBURADOR B530	PLATE, PUMP
32	P004002700	6203581380	4	TORNILLO TAPA BOMBA CARB B530	SCREW
33	12417411120	7292081130	1	TENCIONADOR CARB. T-18.HT20.C27.....	CAP
34	12415813411	E500001393	1	AJUSTADOR CABLE SHP800	ADJUSTER, CABLE
35	12411105810	2000081260	1	TUERCA CARB. BP-35	NUT
36	12411305910	6208381310	1	TAPA CARBURADOR B 530	COVER, TOP
37	12411411120	2002081140	1	RESORTE CARB. B-45	SPRING, THROTTLE
38	12411511120	2002081150	1	RETENEDOR AGUJA CARB B45 .GP45	SEAT, SPRING
39	P004003540	6203581420	1	AGUJA CARBURADOR B530	JET NEEDLE
40	P004002680	6203581330	1	VALVULA CARBURADOR B530	VALVE, THROTTLE

INTAKE
ADMISIÓN

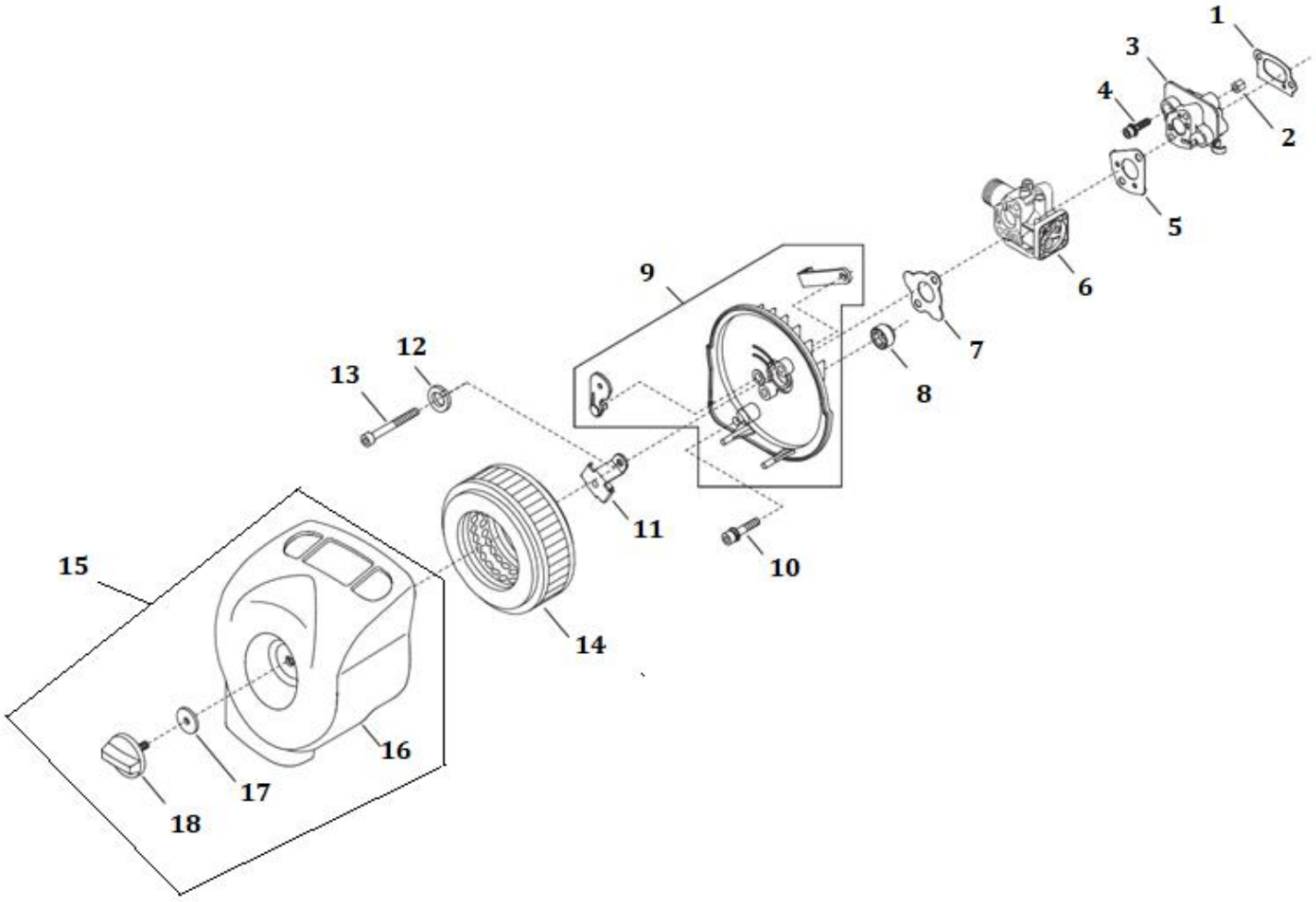

NO.	ECHO P/N	SHINDAIWA P/N	QTY.	DESCRIPCIÓN	DESCRIPTION
1	V103001020	6203512220	1	EMP. INSULADOR B530	GASKET, INTAKE
2	V263000180	2002412260	2	TUERCA INSULADOR C-27C350	NUT
3	A200000680	6203512210	1	INSULADOR B530	INSULATOR, INTAKE
4	V203000581	1102205300	2	PERNO INSULADOR ES 726	BOLT M5×30
5	V103001030	6203581310	1	EMPAQUE CARBURADOR B 530	GASKET, INTAKE
6	A021002570	6203581013	1	CARBURADOR SOLO B530	CARBURETOR
7	V103001040	6203582330	1	EMPAQUETADURA CARBURADOR B 530	GASKET, INTAKE
8	V323000090	6203582361	1	FILTRO INSULADOR B 530	INSULATOR
9	A023000160	6203582011	1	CUERPO FILTRO AIRE COMPLETO B 530	CASE ASSY, AIR FILTER
10	V203000530	11022-05450	1	PERNO FILTOR AIRE	BOLT M5×40
11	A244000180	6203582340	1	PLACA FILTRO COMB. B530	PLATE, PREVENT
12	90060500005	0160005131	2	ARANDELA MUELLE ABR.TUBO C-35,BP35,GP450	WASHER, SPRING 5
13	90010505075	0102005750	2	TORNILLO PLACA CUERPO FILTRO B530	BOLT, H.S.H
14	A226001860	6203582121	1	FILTRO AIRE CARBURADOR B 530	FILTER
	62035-82129	6203582129	1	FILTRO PAPEL B530 PAPEL (Opción 2)	FILTER
15	P021027800	6203582040	1	TAPA FILT.COMP.CARBR.B530	AIR CLEANER COVER ASSEMBLY
16	A232000840	6203582131	1	TAPA FILTRO AIRE B 530	COVER, AIR CLEANER
17	V303000200	6203582350	1	ARAND.TORNILLO TAPA B530 FILTRO B 530	WASHER
18	V299000410	2087033120	1	TORNILLO TAPA FILTRO AIRE B530	THUMBSCREW

EXHAUST
ESCAPE

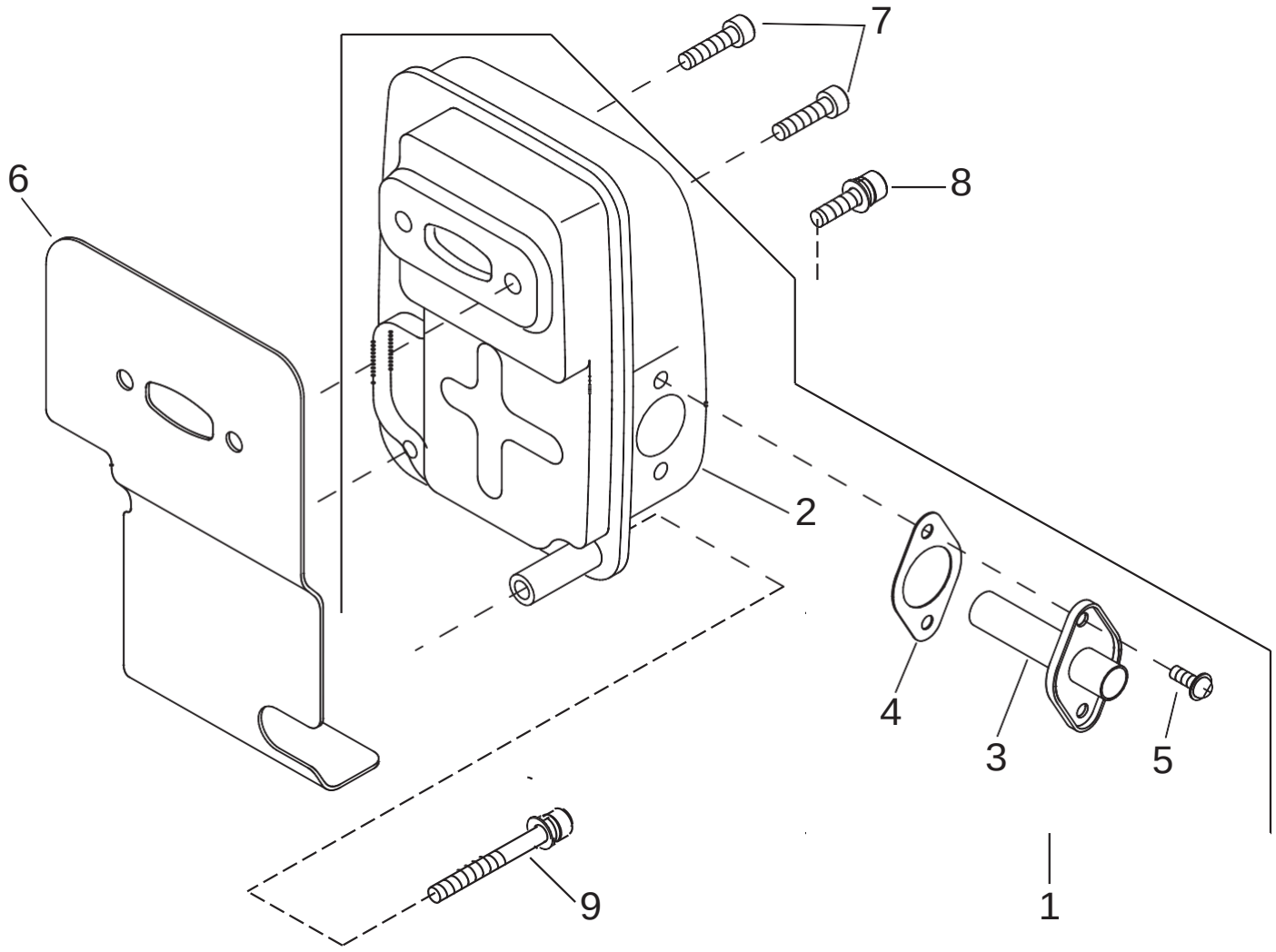

NO.	ECHO P/N	SHINDAIWA P/N	QTY.	DESCRIPCIÓN	DESCRIPTION
1	A030000270	6203515010	1	SILENCIADOR COMPLETO B530	MONTAJE DE SILENCIADOR
2	A300001140	6203515111	2	SILENCIADOR SOLO B530	+SILENCIADOR
3	A313001300	6203515140	1	PLACA ESCAPE B530	+TUBO DE ESCAPE
4	V104001350	6203515150	2	EMP. GUARDA CHISPA B530	+EMPAQUETADURA DE ESCAPE
5	V252000180	1120704120	1	TORNILLO DEL ELECTRONICO GP 25.T20	+TORNILLO M4×12
6	V104001360	6203515210	1	EMP.SILENCIADOR B530	PROTECTOR TÉRMICO ESCAPE
7	90010506025	0102006250	1	PERNO SILENCIADOR C-35, GP-45, B-45,BP35	PERNO 6×25
8	V203000590	1102205160	1	PERNO TAPA CAMPANA B45 C35 C350 B45LA	PERNO M5×16
9	V203000610	1102205450	1	PERNO PROTECTOR CUCHILLA B-450	PERNO M5×45

RECOIL STARTER

ARRANCADOR AUTORRETRÁCTIL

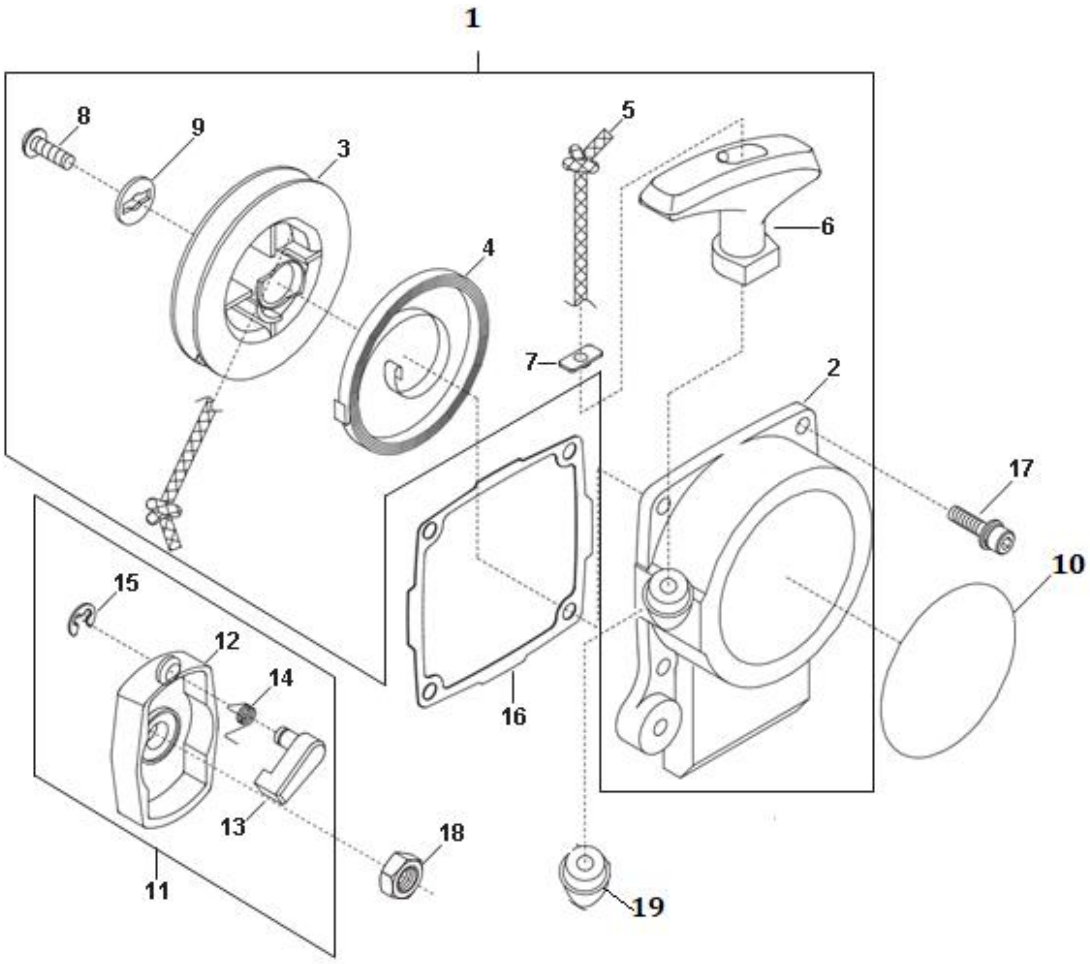

NO.	ECHO P/N	SHINDAIWA P/N	QTY.	DESCRIPCIÓN	DESCRIPTION
1	A051002890	6203575010	1	ARRANCADOR COMPL. B530	STARTER ASSY, RECOIL
2	A500000860	6203575110	1	TAPA ARRANCADOR B530	CASE, RECOIL STARTER
3	P022002080	6203575120	1	TAMBOR ARRANCADOR B530 4300	REEL, ROPE
4	17722006310	6203575130	1	RESORTE ESPIRAL ARRANCADOB530- SRM 4300	RECOIL SPRING
5	17722606310	6203575140	1	CUERDA ARRANCADOR B-530	ROPE
6	A511000210	2210475420	1	ASIDERO B 530	GRIP, STARTER
7	A522000040	2001075210	1	RETEN ARRANC C35.B45.BP35.GP45/450 C350	RETAINER, ROPE
8	17723640630	2003575170	1	PERNO ARRANCADOR C350 C23T20 C250.....	SCREW 5
9	P022022280	E500001454	1	ARANDELA ARRANCADOR DM6110	WASHER
10	X504002770	1942000027	1	ETIQUETA ARRANCADOR	LABEL, TRADE
11	A052000380	6203575020	1	CONJUNTO TRINQUETE ARRANCADOR B530	PULLEY ASSY, STARTER
12	A520000160	6203575210	1	POLEA ARRANCADOR B530	PULLEY, STARTER
13	A514000120	6203575220	1	TRINQUETE ARRANC.B530C350DM6110	PAWL
14	V452000520	2002475230	1	RESORTE ARRANCADOR SHP800B45LA- C350	SPRING, RETURN
15	P022002100	2002475240	1	SEGURO DEL PASADOR C-27 C350	E-RING 4
16	V105000020	6203575331	1	EMPAQUE TAPA ARRANCADOR B 530	GASKET, RECOIL STARTER
17	V203001330	1102005250	4	PERNO CILINDRO T-18.....	BOLT M5×25
18	V266000070	6203575340	1	TUERCA TRINQUETE B530	NUT
19	A510000110	6203575310	1	GUIA CUERDA B530	THUMBSCREW

IGNITION
ENCENDIDO

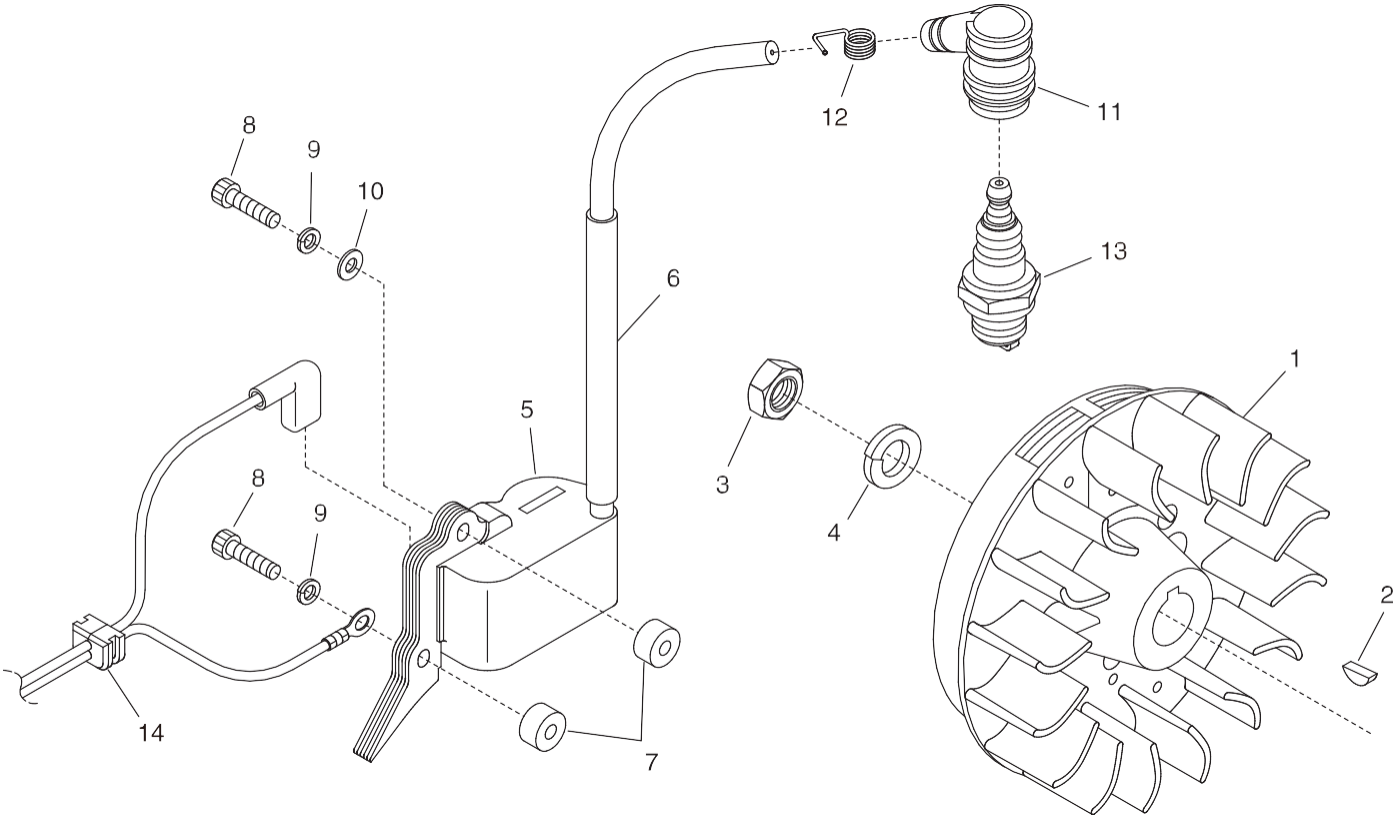

NO.	ECHO P/N	SHINDAIWA P/N	QTY.	DESCRIPCIÓN	DESCRIPTION
1	A409000650	6203571110	1	VOLANTE B 530	FLYWHEEL
2	9311503010	0240303100	1	CHAVETA CIGU.C35 757GP4500	KEY, WOODRUFF 3×10
3	90050300010	0151110061	1	TUERCA SIST.ENC.C35,B45,BP35,C350,GP45,G	NUT 10×1.25
4	90060500010	0160010251	1	ARANDELA MUELLE SIST.ENC.C35,B45,BP35,C3	WASHER, SPRING 10
5	A411000790	6203571020	1	BOBINA B-530	COIL ASSY, IGNITION
6	V475005280	2215572280	1	PROTECTOR SIST. ENC. 577-757-695-575...	TUBE, PROTECTIVE
7	V322000040	7003071620	1	AISLADOR DE BOBINA C230 C20 T18	INSULATOR 4.2×11×6
8	9110004024	0102004240	1	PERNO MANGO IZQUIERDO C-35,C350.....	BOLT M4×24
9	90060500004	0160004101	1	ARANDELA MUELLE BOBINA C-35,C350,GP450..	WASHER, SPRING 4mm
10	V302000010	2001071650	1	ARAND PLANA TAP C35 C350PB450 GP25 T20	WASHER 4.3×9.6×0.8
11	A427000060	2216072220	1	TAPON BUJIA 360 488.....	CAP, SPARK PLUG
12	A426000040	2215472230	1	RESORTE BUJIA B530	TERMINAL, SPARK PLUG
13	15901010130	1300013406	1	BUJIA NGK BMR6A B450 B530 EB240 EB500 ES	SPARK PLUG - BMR6A
14	V136000040	6203571320	1	RETENEDOR CABLE BOBINA B 530	GROMMET

FUEL SYSTEM

SISTEMA DE COMBUSTIBLE

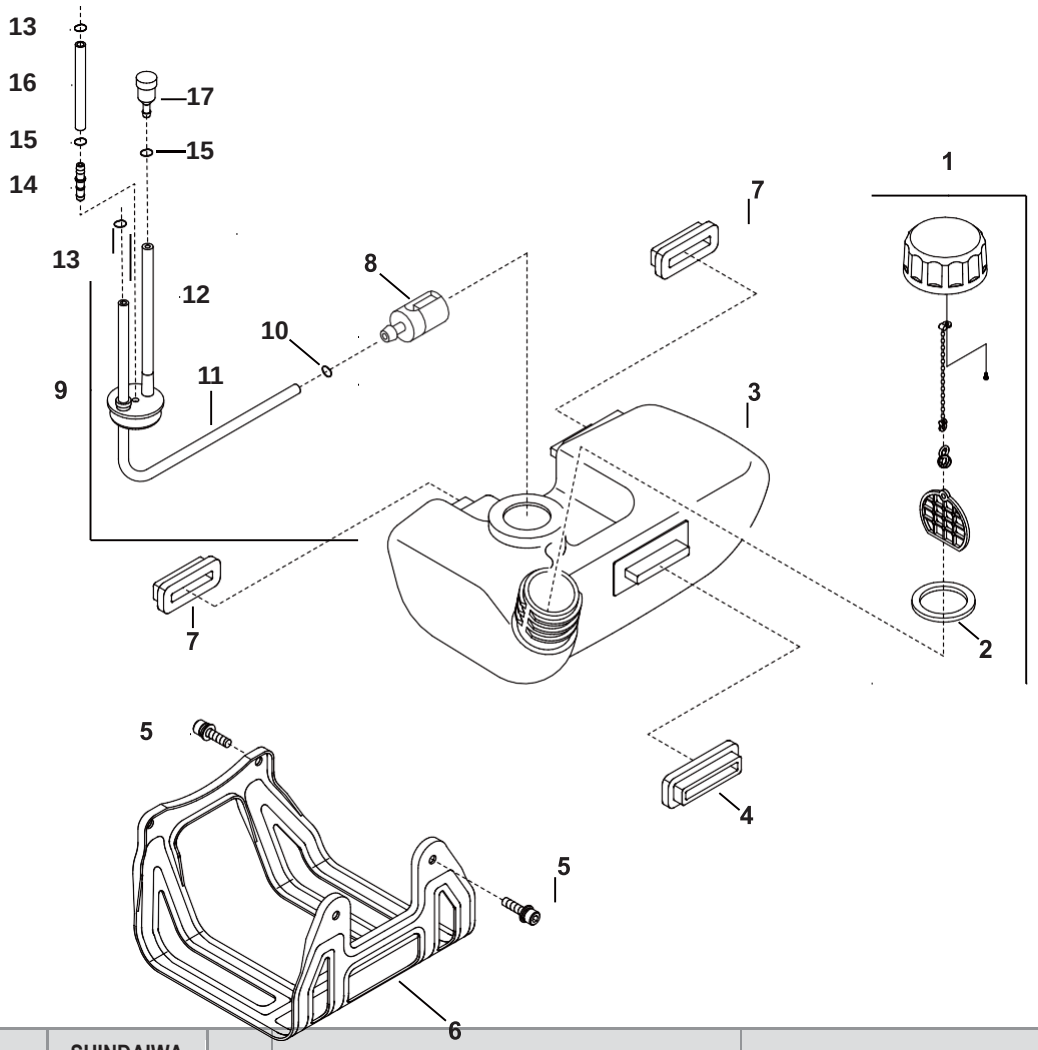

NO.	ECHO P/N	SHINDAIWA P/N	QTY.	DESCRIPCIÓN	DESCRIPTION
1	A033000070	7004385201	1	TAPA SEMICOMP ES726 C350	MONTAJE DE TAPA DE COMBUSTIBLE
2	V107000010	2000085221	1	EMPAQUE TAPA COMB. C35.C27.C230.C350...	EMPAQUETADURA DEL TAPA DE COMBUSTIBLE
3	A350001370	6203585111	1	TANQUE BSB-530	TANQUE DE COMBUSTIBLE
4	V420002520	6203585351	1	AMORTIGUADOR TANQUE B 530	AMORTIGUADOR DEL TANQUE DE COMBUSTIBLE
5	V203000590	1102205160	4	PERNO TAPA CAMPANA B45 C35 C350 B45LA	PERNO M5×16
6	A175000210	6203585360	1	ABRAZADERA TANQUE B530	PROTECTOR, TANQUE DE COMBUSTIBLE
7	V420002510	6203585340	2	AMORTIGUADOR TANQUE B 530	AMORTIGUADOR DEL TANQUE DE COMBUSTIBLE
8	A369000101	2216935400	1	FILTRO GASOLINA COMPLETO 757.577.C350	MONTAJE DE FILTRO DE COMBUSTIBLE
9	P021034560	6203585031	1	TUBERIA COMBUSTIBLE B-530	MONTAJE DE TUBO DE COMBUSTIBLE
10	V490000500	2002085540	1	CLIP 6 MM 360 488 B450 B530 C230 C35 C3	SUJETADOR Ø6
11	V471002480	6203585310	1	TUBO TAMQUE GASOLINAB530	TUBO DE COMBUSTIBLE 3.3×6×215
12	V137000090	6203585321	1	RETENEDOR	OJAL
13	V490000500	2002085540	2	CLIP 6 MM 360 488 B450 B530 C230 C35 C3	SUJETADOR Ø6
14	V186000210	7293385620	1	UNION TUBERIA HT 230	CONECTOR DE TUBO
15	V490000500	2002085540	2	CLIP 6 MM 360 488 B450 B530 C230 C35 C3	SUJETADOR Ø6
16	V471002490	2014083311	1	TUBERIA RETORNO B530	TUBO DE RETORNO
17	A356000050	2219733960	1	VALVULA DE VENTILADOR DE AIRE B530	VÁLVULA DE RESPIRADERO

FAN COVER
CUBIERTA DEL VENTILADOR

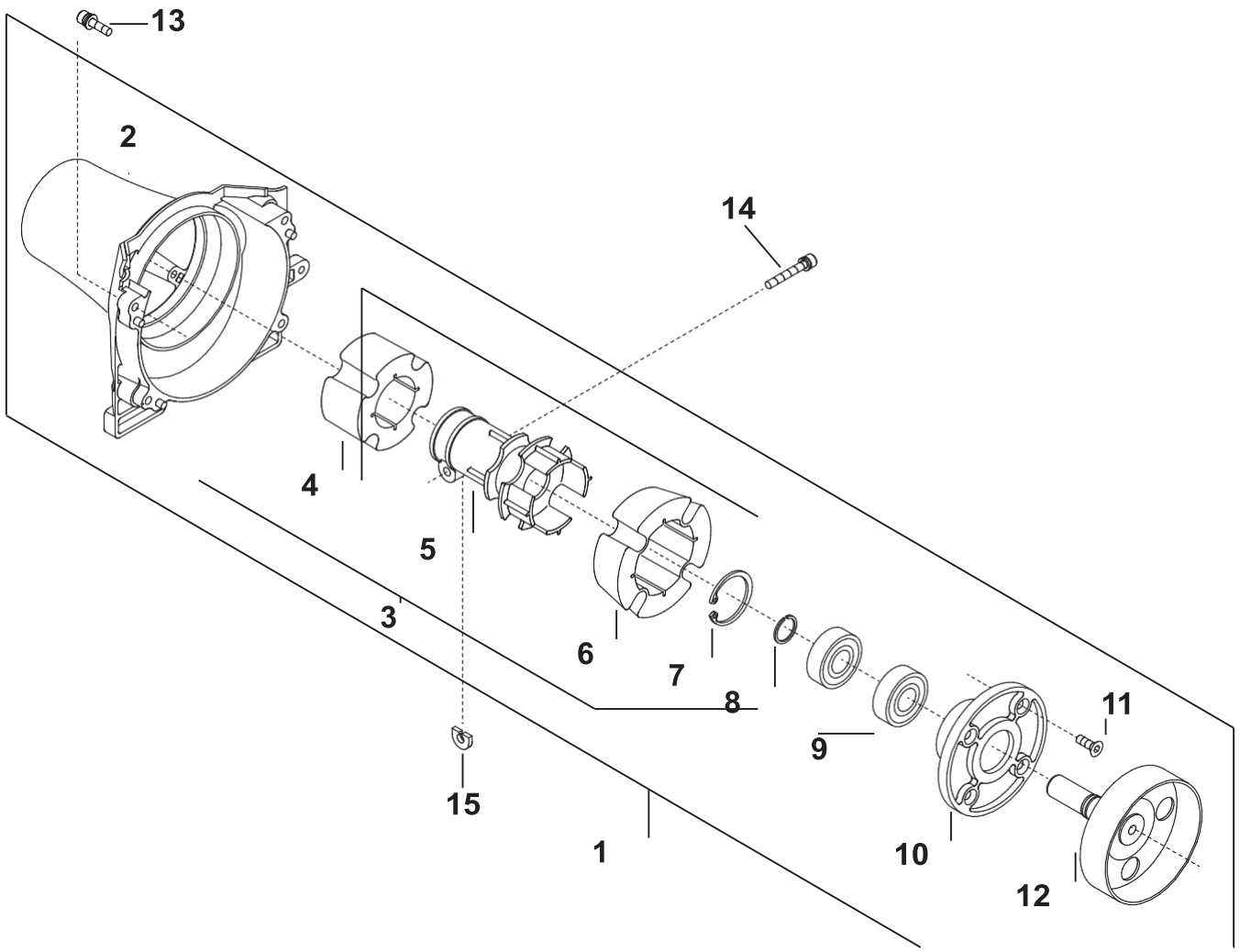

NO.	ECHO P/N	SHINDAIWA P/N	QTY.	DESCRIPCIÓN	DESCRIPTION
1	P021044610	6203531012	1	CUBIERTA COMPELTA	FAN COVER/JOINT ASSY
2	A172001270	6203531110	1	CUBIERTA VOLANTE B 530	COVER, FAN
3	P021042830		1	AMORTIGUADOR COMPLETO	MAIN PIPE CLAMP KIT
4	62035-33120	6203533120	1	AMOTIGUADOR UNION B 530	CUSHION - FRONT
5	A575000440	6203533110	4	UNION EJE B530	JOINT
6	V420002500	6203533130	1	AMORTIGUADOR (A) UNION B530	CUSHION - REAR
7	9242435000	0243235150	2	ANILLO RETENCION CAJA ENG.C-35.B45.C350	RING, SNAP Ø35
8	V583000181	2001131230	1	ANILLO RETEN TAPA C-35/350.B45 BP35...	RING, SNAP
9	90081406202	0200206202	1	RODAMIENTO CAJA ENGRA.SRM3605-4605 TRONZ	BEARING, BALL 6202 DDU
10	A570000200	6203531310	1	CUBIERTA CAMPANA B 530	CASE, CLUTCH
11	V253000440	1126005161	1	TORNILLO CAMPANA B-530	SCREW M5×16
12	A556001600	6203585321	1	RETENEDOR	DRUM, CLUTCH
13	V203000581	1102205300	2	PERNO INSULADOR ES 726	BOLT,5
14	V204000410	1102206280	1	PERNO CAJA ENG. C-35 B45.BP35.....	SCREW - 6X28

THROTTLE CONTROL / SUPPORT HANDLE

CONTROL DEL ACELERADOR / MANGO DE SOPORTE

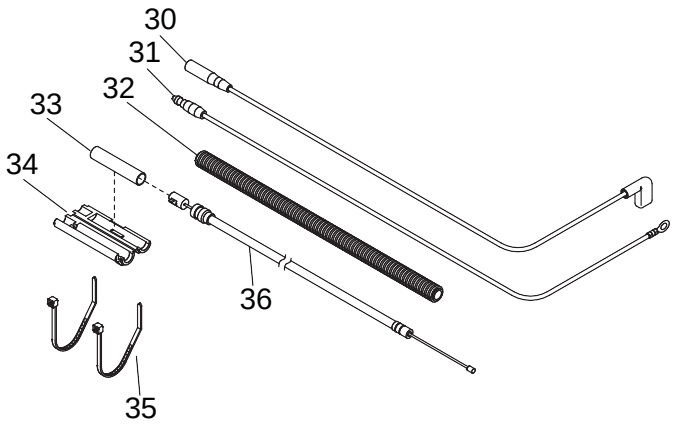

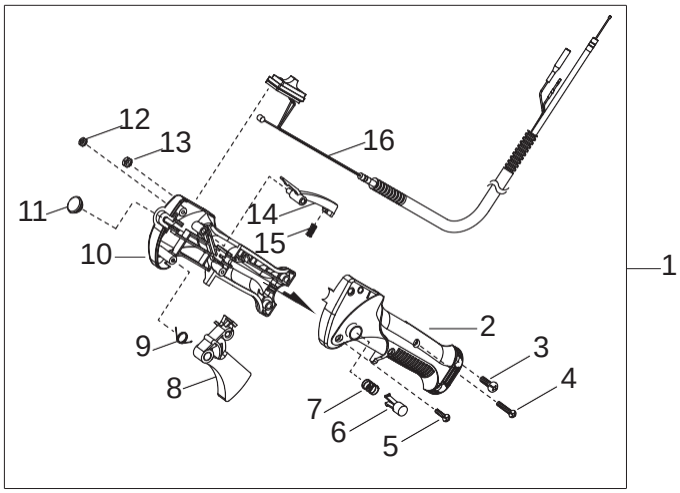

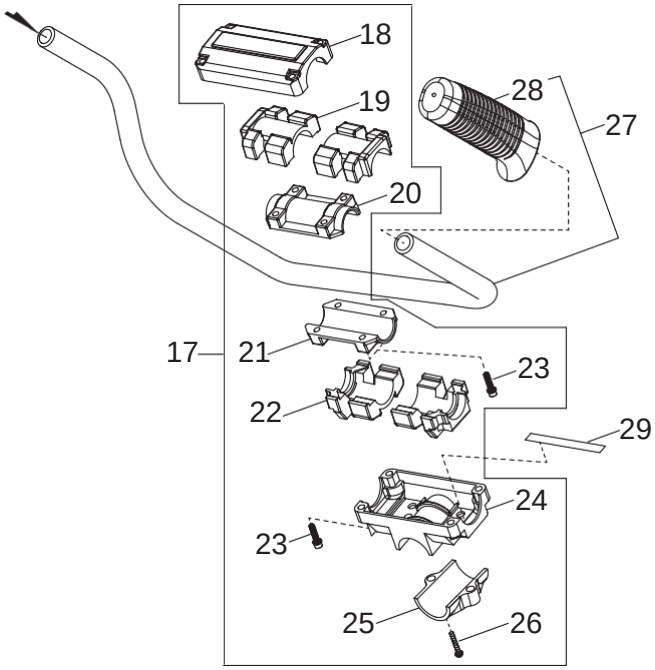

THROTTLE CONTROL / SUPPORT HANDLE

CONTROL DELACELERADOR / MANGO DE SOPORTE

NO.	ECHO P/N	SHINDAIWA P/N	QTY.	DESCRIPCIÓN	DESCRIPTION
1	C044000882	6400764252	1	ACELERADOR COMP.B-530 450 .	THROTTLE CONTROL ASSY
2	P021044960	7255014521	1	CUERPO IZQUIERDO B530 ACELERADOR B 53	CONTROL HANDLE - LEFT
3	V253000580	7087165320	2	TORNILLO PALANCA ACELERA DOR B 530	SCREW
4	V252000370	7087165331	1	TORNILLO PALANCA B530 ACELERADOR B 53	SCREW M4×23
5	V252000360	7087165311	3	TORNILLO 4X16 B45 B450 B530 C350	SCREW, TAPPING 4×16
6	C461000080	7087165170	1	BOTON SEGURO ACELER B450	BUTTON, THROTTLE LOCK
7	V450001010	7087165180	1	RESORTE PALANCA ACELERADOR B 530	SPRING, COMPRESSION
8	C450000581	7087165130	1	PALANCA GATILLO B450 HT230	TRIGGER, THROTTLE
9	V452000690	7087165160	1	RESORTE GATILLO B-450	SPRING, TORSION
10	C412000430	7255014512	1	CUERPO DERECHO B530-C35 TAPAS ACELERADO	CONTROL HANDLE - RIGHT
11	V162000410	2215033630	1	TAPON MANGO 577 757 575 695	PLUG, RUBBER
12	V262000100	7087165340	1	TUERCA PALANCA ACELERADORB 530	NUT M4
13	9201705000	0150105030	2	TUERCA ACELERADOR B 530	NUT
14	C460000241	7087165140	1	SEGURO GATILLO B450 HT230	LOCKOUT, THROTTLE
15	V450001020	7087165150	1	RESORTE SEGURO B450 HT230	SPRING, COMPRESSION
16	V043000540	6400764310	1	CABLE ACELERACION A B530-C350 MODELO ANT	CABLE ASSY, CONTROL
17	P021031461	7255514100	1	ABRAZADERA COMP.MANGO C35.B45.C27.C350	BRACKET KIT, HANDLEBAR
18	C423000740	7201714130	1	TAPA SUPERIOR C-35.C27.C350.B45.....	CLAMP, UPPER
19	V420002470	2201514170	2	COJIN SUPERI MANUBRIO C35C350B45C27	CUSHION, UPPER
20	C423000770	2201514150	1	SOPORTE SUPERIOR C-35 C350 B45 C27.....	CLAMP, UPPER
21	C423000760	2201514140	1	SOPORTE INFERIOR C-35 350C27 ABRAZ.MANUB	CLAMP, LOWER
22	V420002460	2201514160	2	COJIN INFERIOR MANUBRIO C35C350B45C27..	CUSHION, LOWER
23	V203001330	1102005250	8	PERNO CILINDRO T-18.....	BOLT M5×25
24	C423000700	7201714110	1	ABRAZADERA MANGO C-35.B45.C27.C350.....	BRACKET, HANDLE Ø28
25	C423000720	7201714120	1	TAPA INFERIOR C-35-C350 B45-C27.....	CLAMP, LOWER Ø28
26	9114206025	1121006250	2	PERNO MANUBRIO C-35.C-350B-45	SCREW M6×25
27	P021035440	7255014200	1	MANGO COMPLETO B 530	HANDLEBAR ASSY
28	C403000420	7245114320	1	MANGO IZQUIERDO C-350	GRIP
29	A430000000	7251414190	1	CABLE A TIERRA	LEAD - GROUND
30	V485001700	1435213100	1	CABLE BOBINA (B) B530	WIRE, LEAD
31	V485001710	1435013000	1	CABLE BOBINA (A) B-530	WIRE, LEAD
32	V475004500	6203583311	1	TUBO PROTEC CABLE B530	TUBE, FLEXIBLE
33	V475004810	2003782130	1	TUBO UNION B-450	SLEEVE
34	C482000070	7255082120	1	CONECTOR B-450 B-530	CONNECTOR
35	V495001530	1521012303	1	CINTA DE AMARRE DEL CONECTOR B530	BAND
36	V430002930	6203583111	1	CABLE ACELERACION (B) B 530	THROTTLE CABLE

CLUTCH
EMBRAGUE

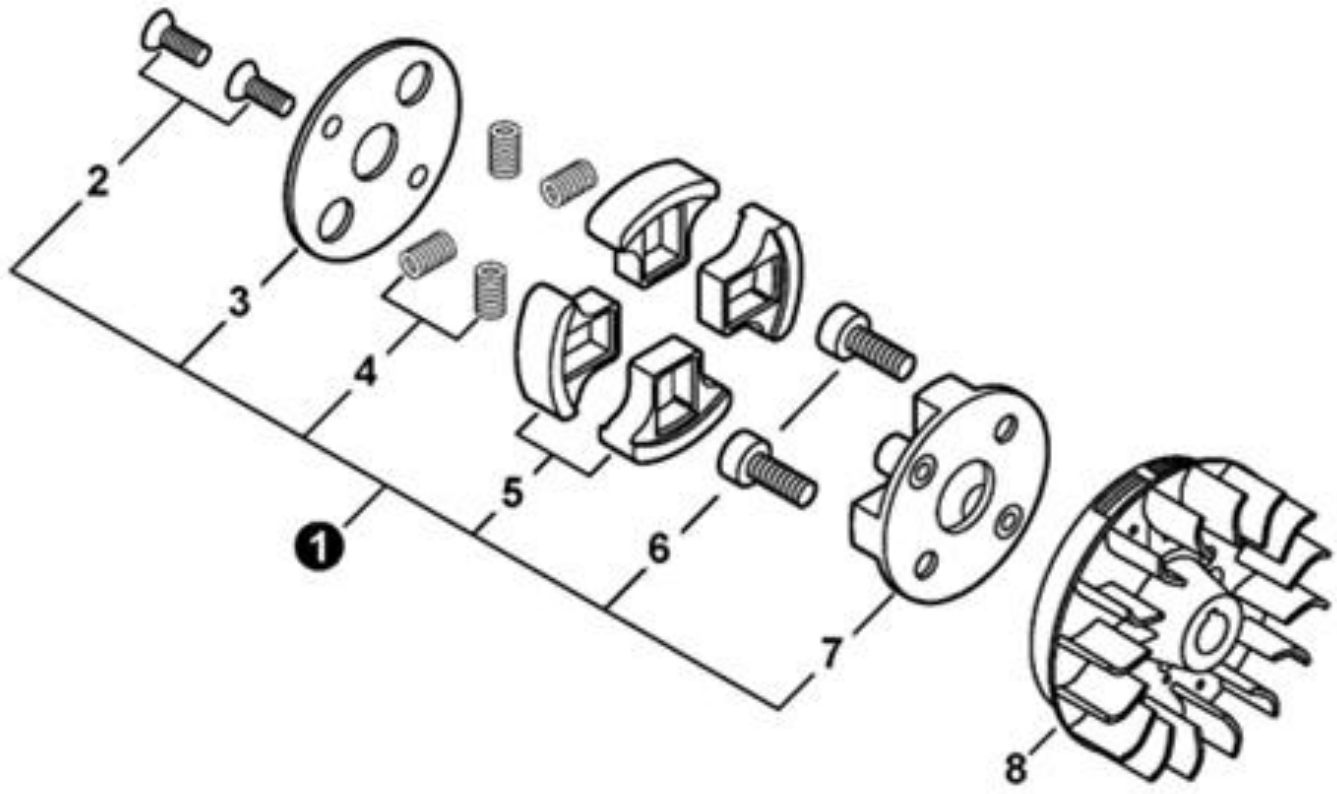

NO.	ECHO P/N	SHINDAIWA P/N	QTY.	DESCRIPCIÓN	DESCRIPTION
1	A056000452	7021051100	1	MONTAJE DE EMBRAGUE	CLUTCH ASSY
2	V203000880	7021051160	2	PERNO 5	BOLT 5
3	A551000120	2002051140	1	PLACA DE EMBRAGUE	PLATE, CLUTCH
4	A566000220	2002051131	4	RESORTE DE EMBRAGUE	SPRING, CLUTCH
5	A555000130	2002051121	4	ZAPATA DE EMBRAGUE	SHOE, CLUTCH
6	A557000120	2002051150	2	PERNO DE EMBRAGUE	BOLT, CLUTCH
7	A552000121	2002051112	1	SALIENTE EMBRAGUE	BOSS, CLUTCH
8	A409000640	7020071200	1	VOLANTE	FLYWHEEL

MAIN PIPE
TUBO PRINCIPAL

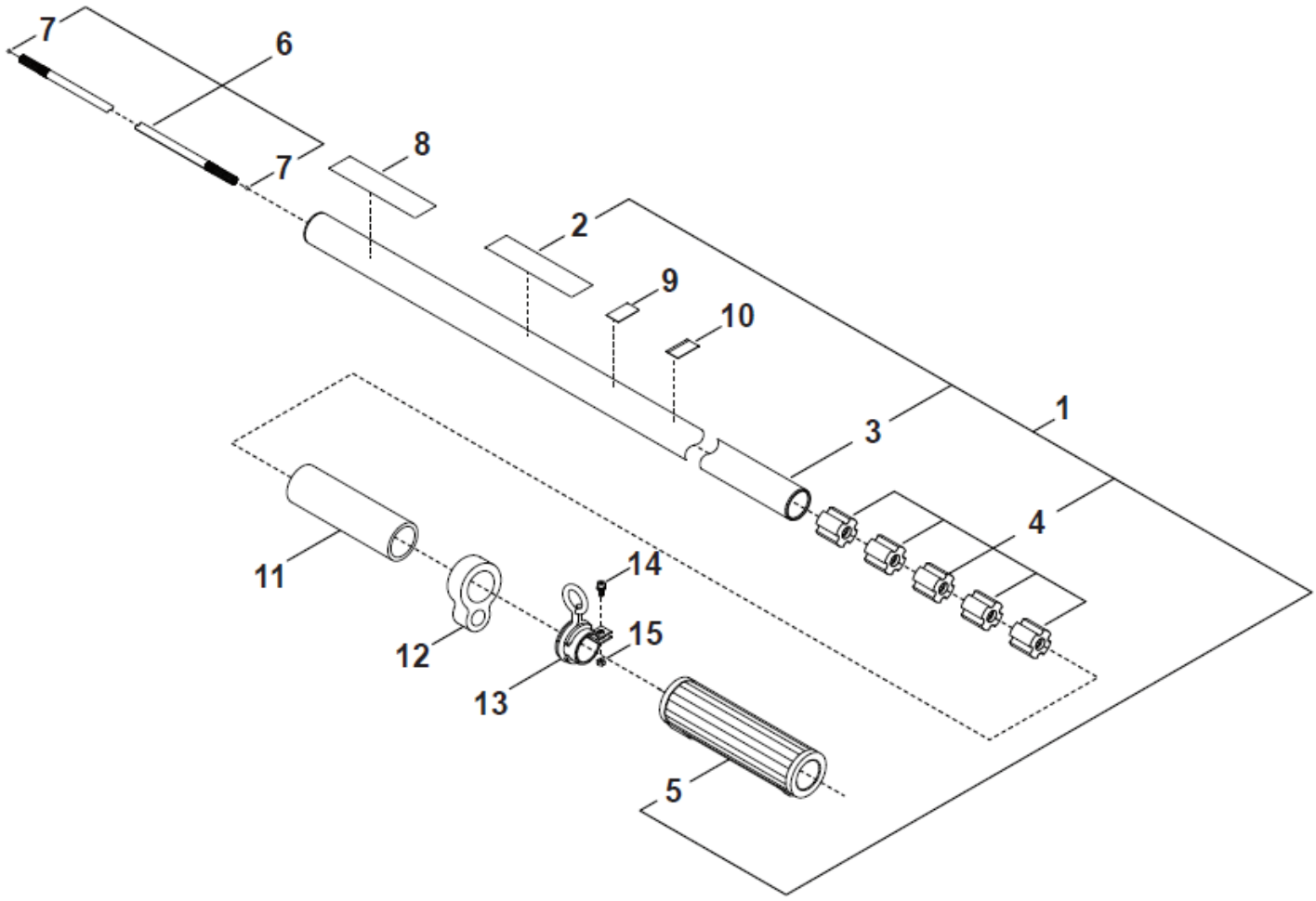

NO.	ECHO P/N	SHINDAIWA P/N	QTY.	DESCRIPCIÓN	DESCRIPTION
1	P021028610	6301912102	1	TUBO COMPLETO B-530	MAIN PIPE ASSY
2	X505005890	1942200029	1	ETIQUETA PRECAUCION C230	LABEL, CAUTION (BLADE CAPABLE)
4	C501000090	6301962120	5	BUJE TUBO B45 / B530	BUSHING
5	C412000450	6301962312	1	EMPUADURA B 530	GRIP
6	C504001290	7255012400	1	EJE CENTRAL B450 B530	DRIVESHAFT ASSY
7	V585000040	2202112420	2	DETENEDOR	STOPPER
8	X504002780	1942000084	1	ETIQUETA SHIND. PROF	LABEL, shindaiwa PROFESSIONAL
9	X505002850	1940100269	1	ETIQUETA MANGO	LABEL, HANDLE
10	X505002860	7200512140	1	ETIQUETA DE ALIENACION	LABEL - ALIGNMENT
11	V364000050	6301962320	1	PROTECTOR TUBO B530 MEJOR AGARRE	PROTECTOR
12	C487000280	7244712190	1	BANDA CABLE B-530	HOLDER, CABLE
13	C063000030	2201712210	1	ABRAZADERA TUBO EXT. C-35 C350.....	HANGER
14	V203000590	1102205160	1	PERNO TAPA CAMPANA B45 C35 C350 B45LA	BOLT M5×12
15	90050000005	E500000455	1	TUERCA ACEL 4605 Y TUBO EXTC. BP35-C35-	NUT 5

GEAR CASE
CAJA DE ENGRANAJES

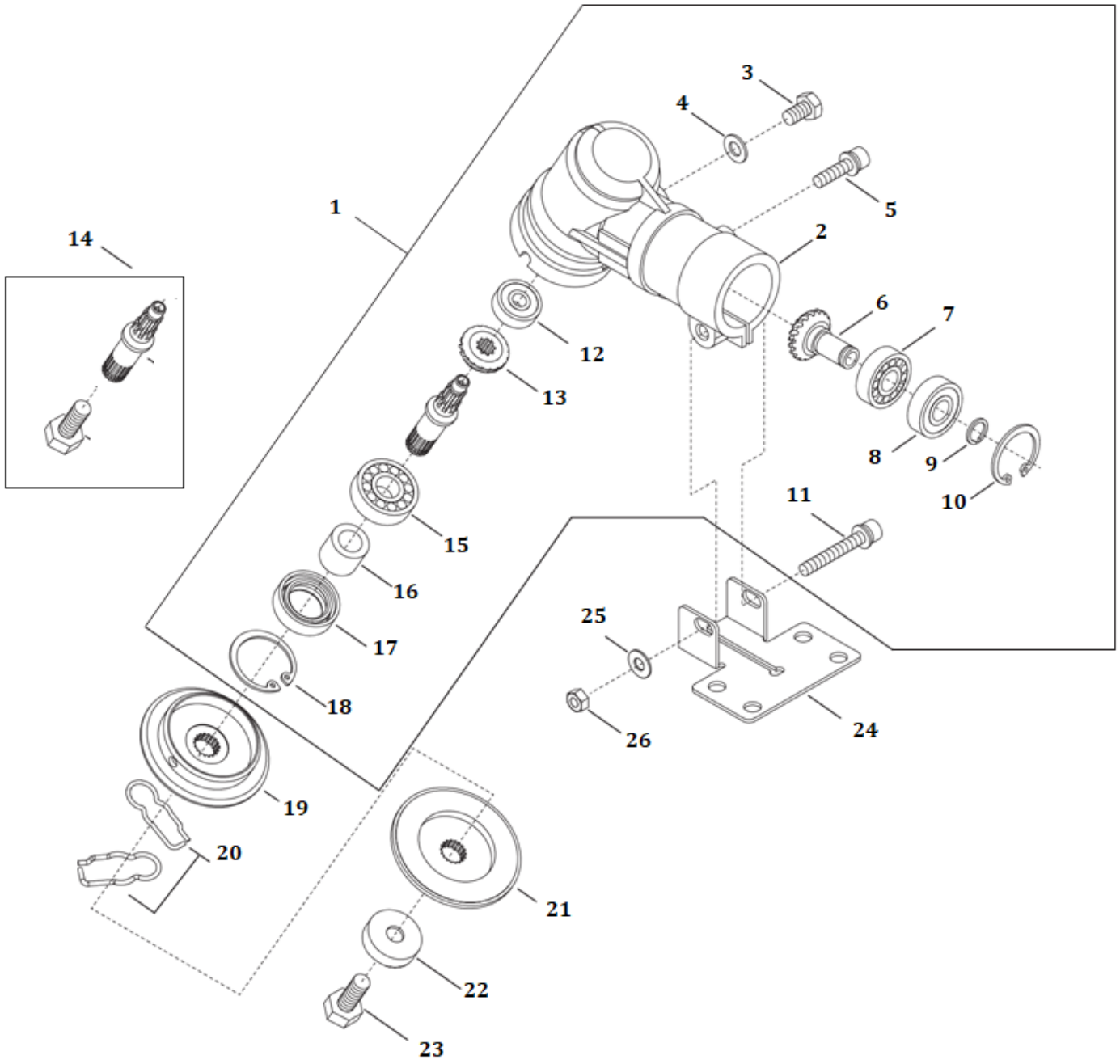

GEAR CASE
CAJA DE ENGRANAJES

NO.	ECHO P/N	SHINDAIWA P/N	QTY.	DESCRIPCIÓN	DESCRIPTION
1	P021039301	6302063020	1	CAJA ENGRANAJE SUB-COMP B 530	GEAR CASE ASSY
2	C531000603	6302063111	1	CARCAZA CAJ MOD NVOB45 C35 C35 GRIS SOLA	HOUSING, GEAR CASE
3	V206000250	2201513410	1	PERNO GRASA CAJA ENG.C35C350C27B45BP35	BOLT M6×10
4	V307000230	2201513420	1	EMPAQUE PERNO GRASA C35C27C350B45BP35..	WASHER
5	V204000740	1102206140	1	PERNO 6X14 B45 B450 B530 C35 C350	BOLT M6×14
6	V651000550	2202113390	1	PINON CAJA B-45.....	PINION ASSY, BEVEL
7	90080036001	3707463310	1	COJINETE CAJA ENG.C35-350B45-3605-4605-B	BEARING, BALL 6001
8	90080406001	0200206001	1	COJINETE CAJA ENG. C-35.B45.C350.HT20...	BEARING, BALL 6001ZZ
9	90070600012	E500001361	1	ANILLO RETEN 12	RING, SNAP Ø12
10	9242428000	0243228120	1	ANILLO RETEN CAJA ENG. C-35.C350.....	RING, SNAP Ø28
11	V204000450	1102206400	1	PERNO PROTECTOR CUCHILLA B450	BOLT M6×40
12	90080206000	3700463310	1	COJINETE CAJA ENGRA C35 T18.T20.B45.C35.	BEARING, BALL 6000DDU
13	V651000540	2201513220	1	ENGRANAJE CAJA ENG. C-35 B45 C350.....	GEAR, BEVEL
14	P021039370	6301963130	1	EJE CAJA ENG. B530	SHAFT, GEAR
15	90081006202	0200006202	1	COJINETE 6202 B45 B450 B530 C35 C350	BEARING, BALL 6202
16	V358000130	2201513230	1	COLLAR CAJA ENG. C-35 B45 C350.....	COLLAR
17	V513000000	2201513120	1	RETEN ACEITE CAJA ENG. C-35	SEAL, OIL
18	9242435000	0243235150	1	ANILLO RETENCION CAJA ENG.C-35.B45.C350	RING, SNAP Ø35
19	C535000770	7244713240	1	SOPORTE A CAJA.ENGRA B45 C35 C350	PLATE, ADAPTOR - UPPER
20	V641000240	2201513290	2	PASADOR CAJA ENG. C-35 B45 C350.....	PIN, SLIDE
21	C535000800	63020-63171	1	PLATO CAJA ENGRANAJE B530	HOLDER
22	C535000790	2201513270	1	PROTECTOR PERNO CAJA ENG. C-35 B45 C350.	GUARD, BOLT
23	V206000230	6301963310	1	PERNO CUCHILLA B530-B45 LARGO	BOLT 10
24	C551000110	7201716130	1	ABRAZADERA INF C35-B45	CLAMP, LOWER
25	90060300006	0161306100	1	ARANDELA EMBRAGUE 360 C350.....	WASHER 6.5×13×1
26	90050000006	0150006051	1	TUERCA ABRAZADERA UNION B45-GP25-C350...	NUT, HEX M6

DEBRIS SHIELD / HARNESS

PROTECTOR / ARNÉS

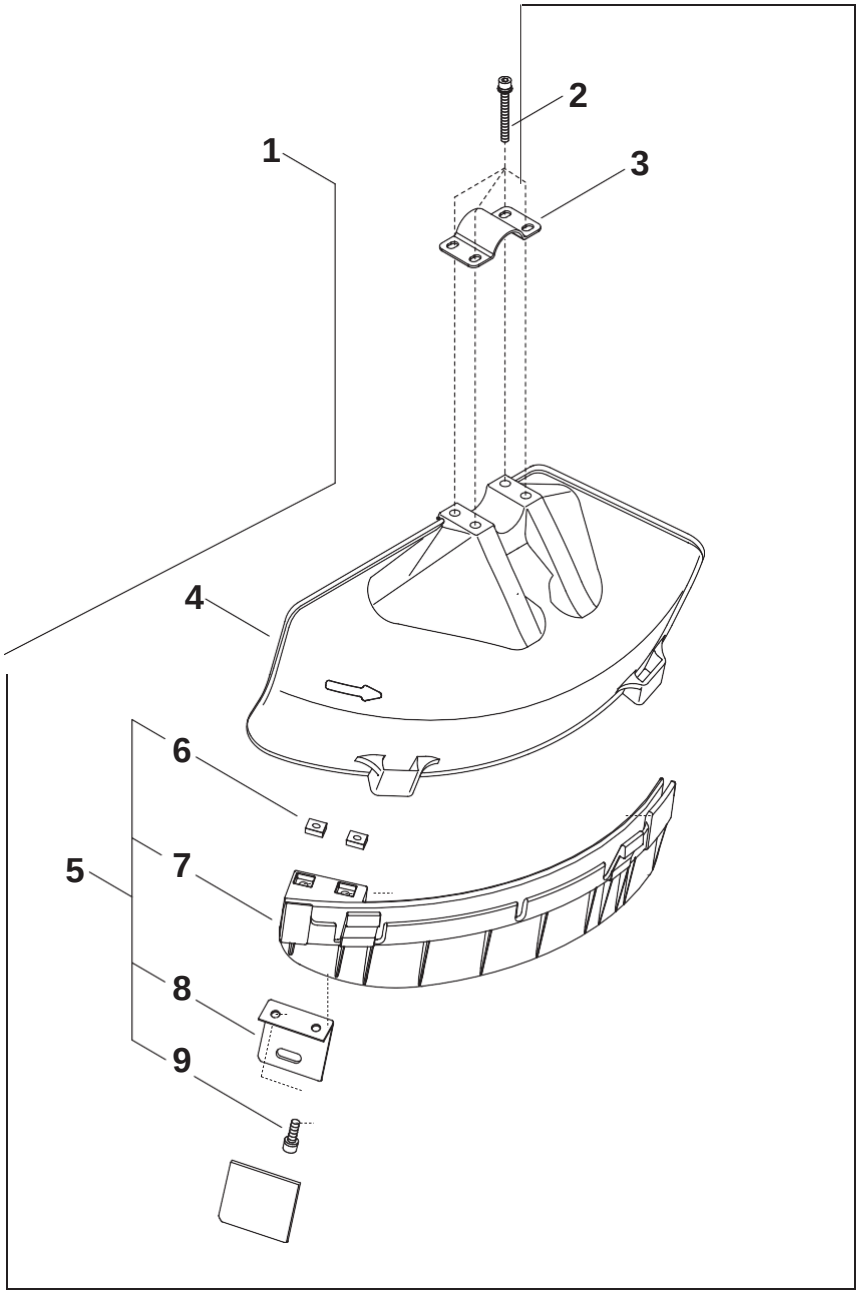

NO.	ECHO P/N	SHINDAIWA P/N	QTY.	DESCRIPCIÓN	DESCRIPTION
1	P021028901	6400066311	1	PROTECTOR COMP BP35-C230 B450-C350-B530	CONJUNTO GUARDÍA
2	V203000610	1102205450	1	PERNO PROTECTOR CUCHILLA B-450	PERNO M5×45
3	C551000060	7248016210	1	ABRAZ PROTECTOR CUCHILLA C 350	ABRAZADERA SUPERIOR
4	C550000430	6290366111	1	PROTECTOR SOLO B530/B450	PROTECTOR CONTRA RESIDUOS PLÁSTICO
5	P021028451	6290366332	1	PROTECTOR C 350 C3410 B530	MONTAJE DE EXTENSIÓN DE PROTECTOR CONTRA RESIDUOS
6	V263000130	2242016120	1	TUERCA PROTECTOR CUCHILLA C-230	TUERCA M5
7	C550000440		1	PROTECTOR SOLO B530/B450	GUARDÍA SUB
8	C554000040		1	CUBIERTA CUCHILLA	CUCHILLA
9	V203000720	1102005160	1	PERNO PROTEC. CUCH. MET. C-35.C230.GP25.	PERNO M5×16

TOOLS

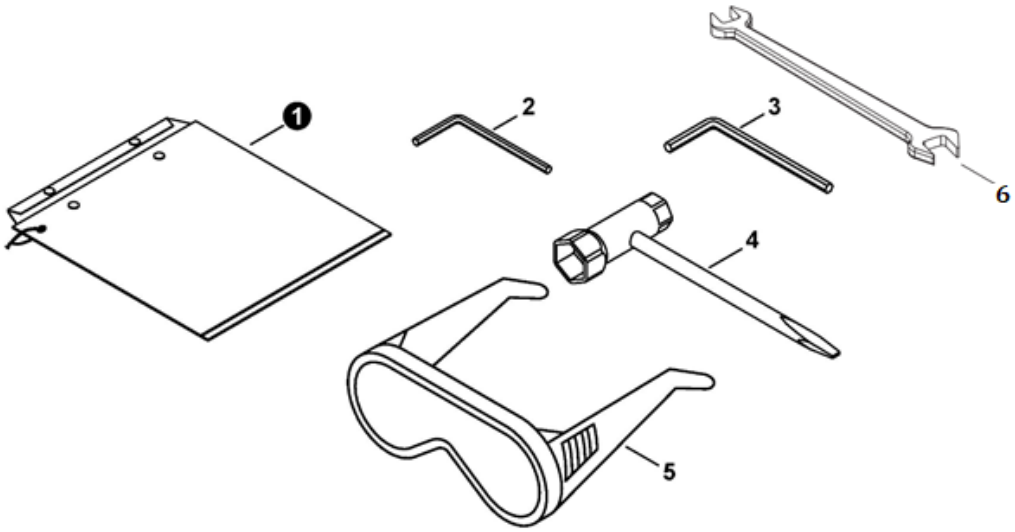

NO.	ECHO P/N	SHINDAIWA P/N	QTY.	DESCRIPCIÓN	DESCRIPTION
1	X698000060	1963903001	1	BOLSA DE HERRAMIENTAS	BAG, TOOL
2	X605000100	0902604001	1	LLAVE ALLEN 4MM	WRENCH, ALLEN 4MM
3	X605000070	0902605001	1	LLAVE ALLEN 5MM	WRENCH, ALLEN 5MM
4	X602000020	7251891180	1	LLAVE EN T 17×19mm	T-WRENCH 17×19mm
5	X690000080	055107	1	ANTEOJOS DE SEGURIDAD	GLASSES, SAFETY
6	X600000020	2200091120	1	LLAVE TUERCAS 8X10	WRENCH, ALLEN

ARNÉS
HARNESS

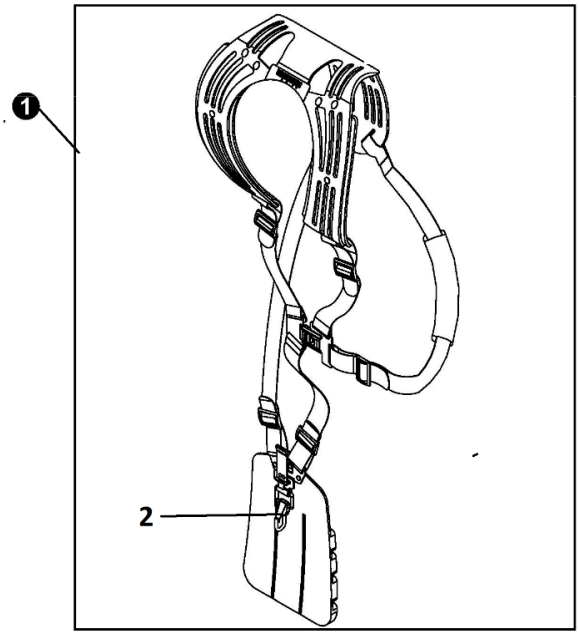

NO.	ECHO P/N	SHINDAIWA P/N	QTY.	DESCRIPCIÓN	DESCRIPTION
1	C062000430	7245117203	1	MONTAJE DE ARNÉS	HARNESS ASSY
2	C649000200	2242117130	1	GANCHO ARNES C-35 B45 C230	